CERTIFIED
JOHN RAMSEY
Exp. 26 Years
"CERTIFIED"
PROFESSIONAL INSPECTOR

I.T.A.
Certified Inspector
Since 2000

American Institute of Inspectors
"CERTIFIED"
MANUFACTURED HOME INSPECTOR
 # M3164

CALIFORNIA LICENSED
1996
 # 752122
GENERAL BUILDING-B
CONCRETE-C-8
CONTRACTOR

Professional

Home Inspection Services

Home Inspection Report



Address: **1950 Blue Sage Lane, Santa Maria – 8/28/26**

INDEX / Page #

1- Key / PREFACE	6- ROOF -1	11- COOLING SYSTEM	16- GARAGE
2- GROUNDS	7- ROOF -2 & ATTIC	12- ELECTRICAL PANEL(s)	17- KITCHEN
3- EXTERIOR	8- PLUMBING	13- ELECTRICAL WIRING	18, 19- BATHROOMS
4- GRADING	9- WATER HEATER	14- INTERIOR	
5- FOUNDATION	10- HEATING SYSTEM	15- FIREPLACE	

Inspector: John Ramsey, CCI
3321 Via Del Sueno Atascadero, CA 93422 (805) 801-7129

© P.H.I.S 06-.2012 Reproduction or utilization of this report without written permission by P.H.I.S. is prohibited.

SUMMARY OF FINDINGS (Not all comments have been brought forward to this summary page. REFER TO FULL REPORT)

MISC

- Disclosure: Large pet door installed through exterior wall / siding② this may result in a security breach See photo page
- *Disclosure- Some dual-pane windows found "visibly" fogged.③ many places – 12 window pane found
- ***Hard wired smoke detector missing at required location*** @ ①:bottom of stairs See photo page
- ***Carbon monoxide detector missing at required location*** @ ①: downstairs

GRADING

- **SOIL LEVEL FOUND HIGH AT AREAS OF THE FOUNDATION.** (Recommend 4 - 6 inches from the bottom of the exterior siding or stucco to dirt, rock, mulch or wood chips) ④@ SOUTHSIDE See photo page
- *RECOMMEND SOME "MINOR" LANDSCAPE GRADING AND MAINTENANCE ALONG AREAS OF THE EXTERIOR.

PLUMBING

- Recommend servicing water softener, low on salt and dirty.④
- Missing the required air gap at water softener drain hose at waste connection per standards ⑤ See photo page
- Disconnected / leaking piping found below garage sink② See photo page
- Sink faucet handle found loose at counter ②: @ master bathroom right sink
- Slow draining at bathroom sink.②④: @ Hall bathroom

ELECTRIC

- Exterior electrical outlet found without a proper weather tight box or cover: ①@ South & west exterior See photo page
- Electrical outlet found damaged: ②①@ south exterior See photo page
- Extension cord improperly used as permanent electrical wiring: ②⑤@ water heater See photo page

ALL OTHER COMPONENTS APPEAR SERVICEABLE

A home inspection focuses on the six (6) major systems of the home. The preceding is a brief summary of these systems. ***This summary cannot be used without the original report.*** Not all comments have been transferred to this summary page. Please read the full-length report for additional details, comments, disclosures, notes and recommendations regarding this property.

© P.H.I.S.06- 2012 Reproduction or utilization of this report without written permission by P.H.I.S. is prohibited.

SUMMARY OF FINDINGS (Not all comments have been brought forward to this summary page. REFER TO FULL REPORT)

N/A

A home inspection focuses on the six (6) major systems of the home. The preceding is a brief summary of these systems. ***This summary cannot be used without the original report.*** Not all comments have been transferred to this summary page. Please read the full-length report for additional details, comments, disclosures, notes and recommendations regarding this property.



1. ● Exterior electrical outlet found without a proper weather tight box or cover: ①@ South & west exterior See photo page



2. ● Electrical outlet found damaged: ②①@ south exterior See photo page



3. ● Disclosure: Large pet door installed through exterior wall / siding② this may result in a security breach See photo page



4. ● **SOIL LEVEL FOUND HIGH AT AREAS OF THE FOUNDATION.** (Recommend 4 - 6 inches from the bottom of the exterior siding or stucco to dirt, rock, mulch or wood chips) ④ @ SOUTHSIDE See photo page



5. ● Missing the required air gap at water softener drain hose at waste connection per standards ⑤ See photo page



6. ● Extension cord improperly used as permanent electrical wiring: ②⑤ @ water heater See photo page



7. ● Disconnected / leaking piping found below garage sink② See photo page



8. ● ***Hard wired smoke detector missing at required location*** @ ①:bottom of stairs See photo page

9. NO MORE PHOTOS

10. **NO MORE PHOTOS**

11.

12.

13. **NO MORE PHOTOS**

14.

15.

16. **NO MORE PHOTOS**

17.

18.

19. **NO MORE PHOTOS**

20.

21.

PROFESSIONAL
HOME INSPECTION SERVICES
3321 Via Del Sueno Atascadero, Ca 93422 (805) 801-7129

Inspection #: **0827262**

THIS IS INTENDED TO BE A LEGALLY BINDING CONTRACT. PLEASE READ IT CAREFULLY.

Inspection Address: **1950 Blue Sage Lane** City: **Santa Maria**

Client: **SAM CONDON**

Note: Any use of this report constitutes full agreement of this contract without exception.

SCOPE OF THE INSPECTION: The real estate inspection to be performed for Client is solely the opinion of this home inspector and is a non-invasive, basic survey and typical operation of systems and components which can be viewed without difficulty or moving obstructions in readily accessible areas of the building. A written report as to the condition of ***visible material defects*** as they exist at the time of the inspection will be provided for the Client per INTER NACHI standards. Pertaining to this inspection report, a material defect is a condition that significantly affects the habitability or safety of the building. Workmanship, aesthetics, or cosmetic defects shall not be considered in determining whether a specific system, or component is defective. The inspection shall be limited to those specific systems and components that are present and visually accessible as described within the report. Components and systems shall be operated with normal user controls only and as conditions permit.
This inspection will be performed in accordance with the Standards of Practice of the International Association of Certified Home Inspectors ("INTER NACHI") in effect at the time of the inspection. A copy of the INTER NACHI Standards is available upon request. This inspection is not intended to be technically exhaustive.

CLIENTS DUTY / RESPONSIBILTY: The inspection report provided shall describe and identify in general the inspected systems, structures, and components of the building and shall identify in general visible material defects in those systems, structures, and components observed and discovered during this home inspection as described in the INTER NACHI standards. Client agrees to read the entire inspection report when it is received and shall promptly call the Inspector with any questions or concerns. Client agrees to and is required to follow any and all recommendations as written within this report per this agreement. **The Client also agrees to hold the inspector harmless for any defect or condition arising from Client's negligent conduct by not following any and all recommendations as described in the report.** In the event Client becomes aware of a reportable condition(s) which was not reported on by the inspector, nor disclosed by others in any format, Client agrees to notify this inspector as soon as any suspected condition is discovered to exists and allow inspector to re-inspect or evaluate the condition(s) prior to Client making any repairs, alterations, or replacement unless it pertains to life safety. Client agrees that failure to notify this inspector as described above is considered a material breach of this contract, and releases inspector of all liability. Let it be known to Client that additional findings may be discovered during repairs or further evaluation as recommended in the report and that P.H.I.S. is not responsible or liable for layered defects. Client agrees that All recommendations for additional review or additional opinions made by the inspector shall be completed by Client within Client's inspection period. Note, Client may need to extend the inspection period to allow for additional evaluations. If the house is occupied during the original inspection, it is the client's duty and agrees to have ALL areas that were not accessible or not visible inspected by P.H.I.S. A refusal of this provision will void any implied warranty and no action can take place on behalf of the Client against P.H.I.S. or its inspectors.

LIMITATIONS, EXCEPTIONS AND EXCLUSIONS: excluded from this real estate inspection is any system, structure, or component of the building which is inaccessible, concealed from view, or cannot be inspected due to circumstances beyond the control of Inspector, or which Client has agreed is not to be inspected. The following are examples of excluded item or areas from the scope of this real estate inspection unless specifically agreed otherwise between Inspector and Client::

- Determining compliance with: installation guidelines, manufacturers' specifications, building codes, ordinances, regulations, covenants, or other restrictions, including local interpretations thereof, or the presence of or conditions arising from defective drywall such as issues with defective Chinese Drywall.
- Obtaining or reviewing information from any third-parties including, but not limited to: government agencies (such as permits), component or system of manufacturers (including product defects, recalls or similar notices), contractors, managers, sellers, occupants, neighbors, consultants, homeowner or similar associations, attorneys, agents or brokers.
- Geotechnical, engineering, structural, architectural, geological conditions, hydrological, land surveying or soils-related examinations, site stability, or off site water intrusion, wildfire, or flood.
- Examination of conditions related to animals, rodents, insects, wood-destroying insects, organisms, ***mold***, and mildew or the damage caused thereby.
- Certain factors relating to any systems, structures, or components of the building, including, but not limited to: adequacy, efficiency, durability or remaining useful life, costs to repair, replace or operate, fair market value, marketability, quality, or advisability as to the purchase of this property.
- Environmental or toxic hazards or conditions, or onsite storage of any material which may be deemed toxic, reactive, combustible, corrosive or hazardous.
- Dismantling of any system, structure, or component, or perform any intrusive or destructive examination, test or analysis.
- Examining or evaluating for failed seals in dual-pane windows or the fire-resistive qualities of any system, structure or component of the building.
- Systems, structures or components of the building which are not permanently installed and/or not attached, including, but not limited to sheds, barns, outbuildings, ponds, water features, fountains, electric gates, portable spas, or any and all systems, structures or components not specifically identified in the written inspection report.
- Common areas, areas under HOA responsibility, or systems, structures, or components thereof, including, but not limited to, those of a common interest development as defined in California Civil Code section 1351, et seq.
- Examining, reporting or evaluating acoustical or other nuisance characteristics of any system, structure, or component of a building, complex, adjoining properties, or neighborhood.
- Operating or evaluating low voltage electrical systems or components such as but not limited to; exterior yard lighting, antennas, security / fire systems, cable or satellite television, telephone, remote controls, radio controls, timers, intercoms, computers, photo-electric, motion sensing lighting or equipment, or other such similar non-primary electrical power devices, components, or systems.

- Examining or operating any sewage disposal system or component including, but not limited to: septic tanks and/or any underground system or portion thereof, or ejector pumps for rain or waste.

Services for inspecting or evaluating the excluded items listed above may be available from Inspector for an additional fee or from specialists qualified to inspect or evaluate a particular category or item. Inspector is a home inspection generalist and is not acting as an expert in any craft or trade.
The inspection report may contain recommendations for further evaluation by an individual other than Inspector herein who is qualified as an expert or specialist.
If Inspector recommends consulting other specialized experts, Client agrees to do so at Client's own expense. It is Client's duty and obligation to do a diligent visual inspection of the property and report all suspect conditions to inspector and exercise reasonable care to protect him or herself regarding the condition of the subject property, including those facts which are known to or within the diligent attention and observation of Client.

USE AGREEMENT: This inspection report is prepared for the use by Client for Client's own information and may not be relied upon by any other persons. Client may distribute copies of the inspection report to the seller(s), buyer(s) and the real estate agents only directly involved in this original transaction. CLIENT AGREES TO INDEMNIFY, DEFEND AND HOLD INSPECTOR HARMLESS FROM ANY THIRD PARTY CLAIMS ARISING OUT OF CLIENT'S DISTRIBUTION OF THE INSPECTION REPORT. This inspection report is the soul property of this inspection firm, which grants usage to the Client by this agreement and cannot be sold, or transferred by without written consent from P.H.I.S. to a new buyer, seller, or third party.

ARBITRATION: Any dispute ,controversy, interpretation or claim including claims for, but not limited to, breach of contract, any form of negligence, fraud or misinterpretation arising out of, from or related to, this contract or arising out of, from or related to this inspection or inspection report shall be submitted first to a Non-Binding Mediation conference and absent a voluntary settlement through Non-Binding Mediation to be followed by final and Binding Arbitration, if necessary, as conducted by Construction Dispute Resolution Services, LLC or Resolute Systems, Inc., utilizing their respective Rules and Procedures. If you would like to utilize the Mediation or Arbitration services of another dispute resolution provider other than one of those so stated please submit your recommendation to us for our consideration. If the dispute is submitted to Binding Arbitration, the decision of the Arbitrator appointed there under shall be final and binding and enforcement of the Arbirtration Award may be entered in any Court or administrative tribunal having jurisdiction thereof.
NOTICE: YOU AND WE WOULD HAVE A RIGHT OR OPPORTUNITY TO LITIGATE DISPUTES THROUGH A COURT AND HAVE A JUDGE OR JURY DECIDE THE DISPUTES BUT HAVE AGREED INSTEAD TO RESOLVE DISPUTES THROUGH MEDIATION AND BINDING ARBITRATION..

GENERAL PROVISIONS: This inspection contract, the real estate inspection, and the inspection report do not constitute a home warranty, guarantee, or insurance policy of any kind whatsoever. The real estate inspection and inspection report are not a substitute disclosure for real estate transactions, which may be required by law. No legal action or proceeding of any kind, including those sounding in tort or contract, can be commenced against Inspector/Inspection Company, or its officers, agents or employees more than one year after the date of the subject inspection. **The reduction in time is based on a $ 200.00 reduction of fee**. Time is expressly of the essence herein. THIS TIME PERIOD IS SHORTER THAN OTHERWISE PROVIDED BY LAW. **Client agrees to compensate P.H.I.S. and/or inspector(s) for ALL costs incurred for any dispute resolution which could be considered frivolous or without cause or judgment**. The written report from the Inspector shall be considered the final and exclusive findings of the Inspector regarding the inspection of the property. Client shall not rely on any oral statements made by the Inspector prior to issuance of the written report. This Agreement shall be binding upon and inure to the benefit of the parties hereto and their heirs, successors and assigns. This agreement constitutes the entire integrated agreement between the parties hereto pertaining to the subject matter hereof, and may be modified only by a written agreement signed by all of the parties hereto. No oral agreements, understandings, or representations shall change, modify, or amend any part of this agreement. Each party signing this Agreement warrants and represents that he/she has the full capacity and authority to execute this Agreement on behalf of the named party. If this Agreement is executed on behalf of Client by any third party, the person executing this Agreement expressly represents to Inspector that he/she has the full and complete authority to execute this Agreement on Client's behalf and to fully and completely bind Client to all of the terms, conditions, limitations, exceptions and exclusions of this Agreement.

MOLD / MOISTURE INTRUSION: P.H.I.S. makes no claims of or proclaims to have knowledge of, and is not required to report on or identify the presence or conditions of mold, mildew or the damage caused thereby in view or concealed or other moisture related conditions or water intrusion into confined areas within the home. ***It is advisable to have a mold and moisture inspection on every home purchased.***

Inspection Fee: **$ 550.00**

_____ : _____

Total Fee Due: **$ 550.00**

Client acknowledges that he/she has read and understands all the terms, conditions and limitations and the P.H.I.S. Mold / Moisture disclaimer & recommendation within this contract and voluntarily agrees to be bound thereby and agrees to pay the fee listed above.

✓**(initial)**_____**I (Client) have read and agree to the Limitations, Exceptions & Exclusions and Mold / Moisture disclaimer & recommendation:**

✓**(initial)**_____**I (Client) have read and agree to the scope of the inspection, all clauses and provisions as described above:**

Client: _____ **SIGNATURE ON FILE**

Inspector: _____ **John Ramsey, CCI** **Date: 8/28/26**

It is very important that you take the time to fully read and comprehend all of the information in this report. This report contains technical material that may be difficult to understand. If you do not understand any portion of this report contact our office immediately for a full explanation.

♦

Follow the instructions contained within this report to optimize your results and best enjoy your home.

♦

If you were not present for the inspection, please contact this office for a phone consultation with your inspector.

♦

Items not found in this inspection report were not inspected and are beyond the scope of this inspection.

♦ How to read this inspection report ♦

Refer to the number key at the top of each page to direct your actions for each specific comment.

If the N/A box is checked or marked, that specific category does not apply for this inspection.

After each comment there may be a circled number, "⑤", which is referenced at the top of each page in the "KEY" and will help direct you in the action you should take.

Only the boxes that are filled or checked are applicable.

The "COMMENT" section is used to describe an inspector's comment in more detail.

It is important that you read all of the "NOTICES" which contain disclosures, limitations or recommendations.

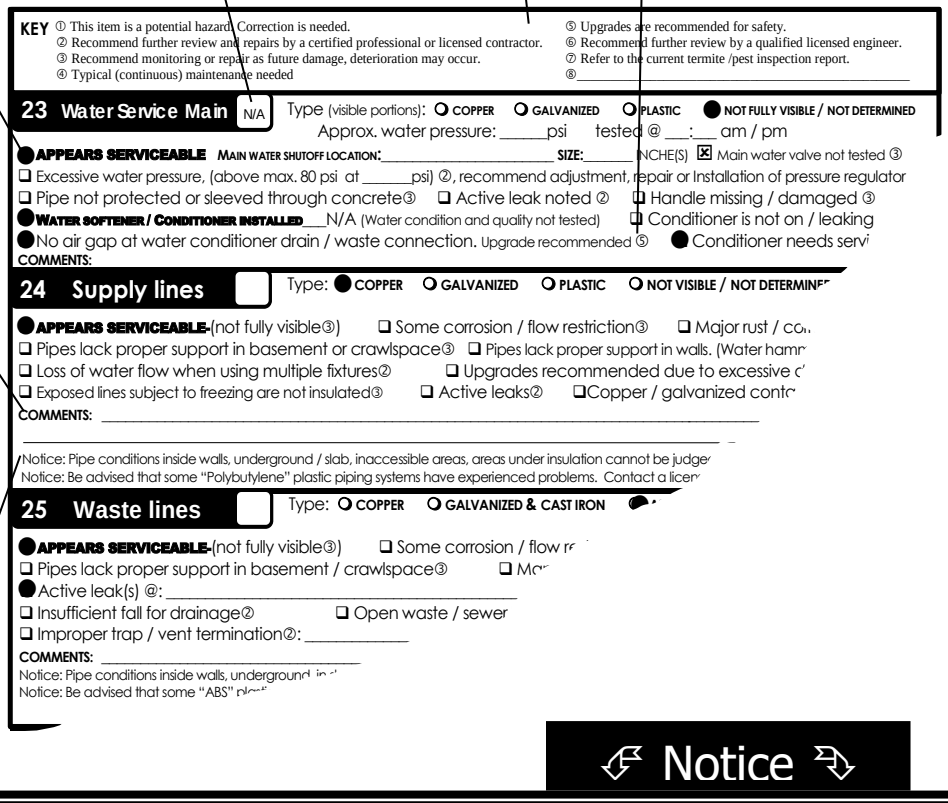

KEY ① This item is a potential hazard. Correction is needed.
② Recommend further review and repairs by a certified professional or licensed contractor.
③ Recommend monitoring or repair as future damage, deterioration may occur.
④ Typical (continuous) maintenance needed
⑤ Upgrades are recommended for safety.
⑥ Recommend further review by a qualified licensed engineer.
⑦ Refer to the current termite /pest inspection report.
⑧_____

23 Water Service Main N/A Type (visible portions): ❍ COPPER ❍ GALVANIZED ❍ PLASTIC ● NOT FULLY VISIBLE / NOT DETERMINED
Approx. water pressure: _____psi tested @ __:__ am / pm
● APPEARS SERVICEABLE MAIN WATER SHUTOFF LOCATION:_____ SIZE:_____ INCHE(S) ☒ Main water valve not tested ③
❑ Excessive water pressure, (above max. 80 psi at _____psi) ②, recommend adjustment, repair or Installation of pressure regulator
❑ Pipe not protected or sleeved through concrete③ ❑ Active leak noted ② ❑ Handle missing / damaged ③
● WATER SOFTENER / CONDITIONER INSTALLED___N/A (Water condition and quality not tested) ❑ Conditioner is not on / leaking
● No air gap at water conditioner drain / waste connection. Upgrade recommended ⑤ ● Conditioner needs servi
COMMENTS:

24 Supply lines Type: ● COPPER ❍ GALVANIZED ❍ PLASTIC ❍ NOT VISIBLE / NOT DETERMINE
● APPEARS SERVICEABLE-(not fully visible③) ❑ Some corrosion / flow restriction③ ❑ Major rust / co
❑ Pipes lack proper support in basement or crawlspace③ ❑ Pipes lack proper support in walls. (Water hamr
❑ Loss of water flow when using multiple fixtures② ❑ Upgrades recommended due to excessive c
❑ Exposed lines subject to freezing are not insulated③ ❑ Active leaks② ❑Copper / galvanized contr
COMMENTS: _____
Notice: Pipe conditions inside walls, underground / slab, inaccessible areas, areas under insulation cannot be judge
Notice: Be advised that some "Polybutylene" plastic piping systems have experienced problems. Contact a licer

25 Waste lines Type: ❍ COPPER ❍ GALVANIZED & CAST IRON
● APPEARS SERVICEABLE-(not fully visible③) ❑ Some corrosion / flow r
❑ Pipes lack proper support in basement / crawlspace③ ❑ Mo
● Active leak(s) @: _____
❑ Insufficient fall for drainage② ❑ Open waste / sewer
❑ Improper trap / vent termination②: _____
COMMENTS: _____
Notice: Pipe conditions inside walls, underground in
Notice: Be advised that some "ABS" plast

Notice

Be advised that, if the home was furnished at the time of the inspection, many areas were not visible or accessible. Therefore, the conditions in these areas could not be determined *fully*. Be aware that some defects, such as water leaks, cannot be detected during a standard home inspection and may only arise after a home has been lived in for a time. A full re-inspection by PHIS is warranted once home is vacant.

IMPORTANT: All repairs should be completed or supervised by a licensed contractor per state requirements (CA Business and Professions Code and all other applicable requirements).

1. All plumbing repairs should be done by a licensed plumbing contractor.
2. All electrical repairs should be done by a licensed electrical contractor.
3. All heating and/or cooling system repairs should be done by a licensed HVAC contractor.
4. All roof repairs should be done by a licensed roofing contractor.

© P.H.I.S. 2010 Reproduction or utilization of this report without written permission by P.H.I.S. is prohibited.

The Key is at the top of each page for easier reference

This Professional Home Inspection Services inspection report provides a general, objective, unbiased overview of the systems and components of the building as described below. This inspection is conducted with the highest degree of honesty and professionalism, and conforms to the standards of practice set forth by the International Association of Certified Home Inspectors (INTER NACHI).
In no way is this report to be considered a warranty or guarantee.

Definition:

SERVICEABLE: It is the inspector's opinion that the system or component appears functioning at the time of this inspection. No visible excessive damage or defect affecting normal operation of the system or component was noted. A system or component which may be heavily deteriorated or have some damage but still functioning properly can still be considered serviceable even if the system or component needs servicing or repair.

Scope of Inspection

The information contained within this inspection report is limited to a nondestructive visual inspection of the building(s) and limited only to the items listed within the contents of this report. This inspection report is created to give the parties involved an objective overview of the general systems and components of the building. At no time can P.H.I.S. enforce any codes, laws or make any determination as to who should repair, replace or maintain any item mentioned in this report. This report is a recommendation only. It is intended to identify any major system or component which may be in need of immediate attention, repair or general

You must read this "entire" inspection report to get the full overall condition. After review of these findings, follow the recommended action as stated within the comments and key symbols.

Symbol Key: (Refer to the key for information regarding circled numbers following the comment. i.e. ②)

① This is a potential hazard. Correction is needed.
② Recommend further review and repairs by a certified professional or licensed contractor.
③ Recommend servicing, repair, and monitor as future issues may occur.
④ Maintenance needed. Contact a qualified professional
⑤ Upgrades are recommended for safety.
⑥ Recommend further review by a qualified licensed engineer.
⑦ Refer to the current termite / pest inspection report.
⑧ Recommend monitoring. Future repairs may be warranted
⑨ Area not fully visible or accessible. Contact our office to re-inspect once access is made available.
Please read all special "notices" below certain comment fields concerning inspection limitations.

General Information

The following is not part of this inspection ②:_____

PRESENT DURING INSPECTION: ❑ Buyer ❑ Seller ❑ Tenant ❑ Buyer's Agent ❑ Seller's Agent ● **Alone**
WEATHER CONDITIONS: ❑ Dry ● **Rain today** ❑ Rain recently Approx. Temp. 65 °F

INSPECTION DATE: 08 / 27 / 26 **START TIME:** 12:30 **FINISH TIME:** 3:00 **INSPECTOR:** JOHN RAMSEY, CCI.
☒ **IT IS THE RESPONSIBILITY OF THE BUYER TO CHECK WITH LOCAL BUILDING DEPARTMENTS FOR PERMIT INFORMATION DURING ALL REAL ESTATE TRANSACTIONS**
PROPERTY INFORMATION: ● **Single Family** ❑ Manufactured Home
❑ Multi family: ❑ Condominium ❑ Industrial ❑ Commercial

OCCUPANCY STATUS: ❑ *Occupied ❑ Vacant ❑ *Partially furnished ● **FOR THE PURPOSE OF THIS INSPECTION THE FRONT DOOR FACES: WEST**

APPROXIMATE YEAR BUILT (PER ORDERING PARTY) : 2018 ● **ADDITIONS OR REMODELS NOTED / SUSPECTED. ②**

This report contains technical information. If you were not present during the inspection, please contact this office to arrange for a phone consultation with your inspector. If you choose not to consult the inspector, this inspection company and inspector cannot be held liable for your misinterpretation or misunderstanding of this report's contents.
*A full re-inspection by PHIS is warranted once home is vacant as an occupied home cannot be fully inspected.

KEY
① This is a potential hazard. Correction is needed.
② Recommend further review and repairs by a certified professional or licensed contractor.
③ Recommend servicing, repair and monitor as future issues may occur.
④ Maintenance needed. Contact a qualified professional.
⑤ Upgrades are recommended for safety.
⑥ Recommend further review by a qualified licensed engineer.
⑦ Refer to the current termite /pest inspection report.
⑧ Recommend monitoring. Future repairs may be warranted
⑨ Area not fully visible or accessible. Contact our office to re-inspect once access is made available.

1 Driveway

Type: ● **CONCRETE** ❍ ASPHALT ❍ BRICK / PAVER ❍ GRAVEL / DIRT

● **APPEARS SERVICEABLE** ☒ Typical & common cracks ⑧ ❑ Moderate & Major cracks in driveway ③
❑ Maintenance / Sealant recommended at asphalt driveway.④③ ❑ Eroded asphalt at areas of driveway.④③
❑ Disclosure -Areas of the driveway appear raised or settled with potential trip hazards ⑤ ❑ Driveway Not fully visible. ⑨
❑ Disclosure- Due to the slope or height of the driveway at the garage connection, some water intrusion into the garage may occur during certain weather. ⑧ ❑ Areas of driveway found to be installed above exterior siding or trim ⑧
❑ Poor drainage / possible ponding of water at driveway.③④

2 Sidewalks

Type: ● **CONCRETE** ❍ ROCK ❍ BRICK / PAVER ❍ GRAVEL / DIRT ❍ TILE

● **APPEARS SERVICEABLE** ☒ Typical & common cracks in sidewalks ③
❑ Disclosure-Areas of walkway(s) appear raised, settled or uneven with potential trip hazards. (Caution) ⑤
❑ Disclosure-Areas of sidewalk(s) found to be installed at or above exterior siding.⑧
❑ Disclosure-Areas of suspected poor drainage with possible ponding of water and/or a suspected improper slope of sidewalk(s).③④

3 Patios / Porches

Location: A: **WESTSIDE** B:_____ C:_____

● **APPEARS SERVICEABLE** Type: ● CONCRETE ❑ BRICK / PAVER ❍ TILE ❍ROCK
☒ Typical / common cracks.⑧ ❑ Moderate / Major cracks in patio ③②
❑ Disclosure- Areas of suspected poor drainage, possible ponding of water at patios.③④
❑ Disclosure-Areas of the patio(s) appear to be raised, settled or uneven with potential trip hazards. (Caution). ⑤
❑ Disclosure-Areas of patio were installed at or above exterior stucco or wood siding & exterior door threshold. ⑦⑧
❑ Missing / Recommend a proper exterior door landing off the sliding glass door per standards. ⑤

4 Covers-Patio / Porch N/A

Location: A:_____ B:_____ C:_____

❑ **APPEARS WITHIN USEFUL LIFE**
❑ Some moisture damage found at the porch / patio cover at base of the post. Refer to termite report for locations and extent②:
❑ Recommend metal strapping at post to beam connection(s) as an upgrade at patio cover per current standards.⑤
❑ Areas of patio framing appear to be over-spanned & sagging. ② (see photo page)
❑ Damaged or Deteriorated roof material found at the patio cover. ②
❑ Patio covers or trellis should not be connected to the house fascia board without properly fastening or strapping the fascia to the structural roof framing. This can be considered an unsecured or improper attachment to the house. Simple upgrades recommended per current standards.⑤②

5 Decks N/A

Deck planking material: ❑ EPI (BRAZILIAN HARD WOOD) ❑ "TREX "OR (SYNTHETIC MATERIAL) ❑ REDWOOD
Location: **A:**

❑ **APPEARS WITHIN USEFUL LIFE** - ⑦ ❑ Disclosure- Railings are recommended as an upgrade around deck(s) to prevent a fall. ⑤
❑ Some moisture and/or bug type damage / deterioration found at wood decking and/or wood deck railings. (refer to termite report for extent and locations)② ❑ Earth-to-wood contact visible at areas of the wood decking.③⑦ ❑ Poor site drainage / ponding of water under deck.②⑦
❑ Underside of wood deck not visible, deck on grade ⑧⑨⑦ ❑ Suspected leaking of the waterproof deck / stains noted below deck. ②⑦
❑ Deck appears unsound: ②⑥⑦ ❑ Deteriorated waterproof deck coating needing repair or maintenance found at areas of the: ②
❑ No / improper secondary deck drain(s) found at the waterproof deck. Secondary deck drains are required to be 2 - inches above floor drain. ②
❑ Disclosure - Hazardous condition: Nails are popped up above the deck planks, trip & stub hazard.⑤
❑ **DECK RAILINGS APPEAR SERVICEABLE** ❑ Poor drainage found at the water proof deck.③
❑ Loose / unsecured deck railings. This could be considered a potential hazard. Repairs or upgrades warranted.①②
❑ Disclosure - Openings in the deck railings do not meet current standards. Upgrades recommended. ⑤

*Note- Determining if waterproof coated decking is actively leaking with water testing is not performed and is beyond the scope of this inspection. Average life of waterproof coating is approximately 5-7 years. ② -See photo page

Maintenance Tips

DECKS: Inspect your wood decks and railings annually for any earth-to-wood contact, popping nails or any deteriorated / damaged wood which may be in need of maintenance or repair. If you have a deck above a living space or garage, be sure to regularly inspect the underside for possible leaks. Wood decks should be stained or painted as needed.

KEY
① This is a potential hazard. Correction is needed.
② Recommend further review and repairs by a certified professional or licensed contractor.
③ Recommend servicing, repair and monitor as future issues may occur.
④ Maintenance needed. Contact a qualified professional.
⑤ Upgrades are recommended for safety.
⑥ Recommend further review by a qualified licensed engineer.
⑦ Refer to the current termite /pest inspection report.
⑧ Recommend monitoring. Future repairs may be warranted
⑨ Area not fully visible or accessible. Contact our office to re-inspect once access is made available.

6 Building Exterior Walls

Structure type: ● **WOOD FRAMED** ❑ MASONRY ❑ LOG
Wall covering: ❑ STUCCO ❑ WOOD SIDING ❑ CEMENT FIBROUS SIDING ❑ BRICK VENEER ❍ ROCK VENEER ❍ VINYL

● **APPEARS SERVICEABLE** ● Typical & common cracks ③ ❑ Major cracks visible in the exterior stucco siding.②⑥
● **Recommend sealing the separations in exterior siding. Typical maintenance.④** ● **Deteriorated paint or finish on the exterior.④**
❑ Moisture and / or bug type damage / deterioration found at exterior wood siding and trim. See termite report for locations and extent. ③⑦
❑ Recommend sealing holes in exterior walls to prevent water intrusion around unused open holes, exterior light fixtures, around exterior electrical boxes, and where utility pipes and/or wires pass through the exterior walls.④ ❑ Loose or separated exterior brick / stone veneer. Sealant/ maintenance warranted)③ ② ❑ Disclosure: Newer stucco color coat noted over older stucco, peeling has or may occur ②③
● **Disclosure: Large pet door installed through exterior wall / siding② this may result in a security breach** See photo page
❑ Exterior areas not fully visible due to overgrown foliage. ⑨
❑ Some moisture damage, peeling of painted stucco color coat near grade. (Ongoing maintenance recommended) ③

7 Trim

Type: ● **WOOD** ❑ STUCCO ❑ METAL ❑ VINYL ❑ Trim not fully visible ③

● **APPEARS SERVICEABLE** ● **Deteriorated paint or finish at exterior trim areas.③④** ❑ Missing exterior wall / window trim @:③
❑ Moisture and/or bug type damage & deterioration found at exterior areas such as eaves, fascia and/or trim. ②⑦ (Refer to the termite report for locations and extent). ②
● Caulking recommended at all wood trim areas, doors, windows, fascia, etc. (typical maintenance).④

8 Exterior Stairs N/A

Type: ❍ CONCRETE ❍ WOOD ❍ BRICK / PAVER ❍ WATERPROOFED

❑ **APPEARS SERVICEABLE** ❑ Exterior stairs / steps found unsafe.①② ❑ Poor drainage noted at exterior steps.⑤
❑ Loose & unsecured treads found at areas of exterior stairs /steps: ① ❑ Earth-to-wood contact at exterior wood stairs / steps: ③⑦
❑ Moisture and or bug type damage & deterioration found at exterior wood stairs / steps / landings.②⑦
❑ Uneven step tread rise noted at exterior stairs / steps. Potential trip / fall hazard. ①
❑ **RAILINGS SERVICEABLE** ❑ Exterior stairway railing(s) are missing / loose and in need of repair: EXTERIOR STAIRS OFF. ①②
❑ Disclosure - Openings in exterior stairway railings do not meet current standards (upgrades recommended for safety).
❑ Recommend a proper gripable handrail at all exterior stairs and steps as a safety upgrade where currently not installed. ⑤

9 Fences & Gates

● Comments made below are informational only and at the discretion of the inspector. The comments below do not in any way constitute a full inspection of the fencing.

☒ **FENCES ARE OUTSIDE THE SCOPE OF THIS HOME INSPECTION AND ARE NOT INSPECTED AT THIS TIME.** ⑧
❑ Moisture damage, loose, rotted posts, (refer to the termite report).② ❑ Broken / Loose / Missing fence boards.③
❑ Gates and/or latch need adjustment / repair.③ ❑ Minor and moderate leaning found at areas of fencing.②③
❑ Improper connection of the wood fence to the wood house exterior siding. This is considered a direct earth-to-wood contact.②⑦
❑ Proper / complete pool safety barriers recommended. Proper fencing, self closing gates with proper latches, alarms on the exit door from the house and/or garage with access to the pool area are missing or in need of repairs, or do not meet current standards. ①②⑤

10 Sprinklers

● Comments below are informational only and do not constitute a full inspection of the sprinkler system.

☒ **SPRINKLERS ARE OUTSIDE THE SCOPE OF THIS HOME INSPECTION. IF CONCERNED HAVE TESTED BY A LICENSED LANDSCAPE PROFESSIONAL.** ②
❑ Recommend freeze protection at exposed sprinkler valves and/or exposed sprinkler pipes. ③
❑ Note - Adjust sprinkler heads from spraying onto house, sidewalks, & fences.③④⑤
❑ Active water leak found at sprinkler valve or piping at: ②
❑ Disclosure: Non-UV rated white plastic PVC pipe used above ground at / for sprinkler valves. Subject to physical and sun deterioration and / or damage. Upgrades recommended.③ ☒ Automatic sprinkler timers not inspected.②

11 Retaining Wall(s) N/A

Type: ❍ CONCRETE ❍ STACKED ❍ MASONRY ❍ BRICK ❍ ROCK ❍ WOOD ❍ STUCCO
☒ Disclosure - Retaining walls are not fully visible ③

❑ **APPEARS SERVICEABLE** ❑ Common cracks visible at areas of the retaining walls ③
❑ Loose, damaged, and/or missing caps atop areas of retaining walls.③⑤
❑ Moderate, Major cracks with some displacement visible in the retaining walls ②③⑥
❑ Some visible moisture damaged, deterioration, and displacement of the wood retaining walls. ②③
❑ Railings are recommended as an upgrade around upper areas of retaining walls to help prevent a fall, (disclosure)

Maintenance Tip
Caulk and seal around windows, doors, and wood wall trim; and paint your wood siding and/or your wood trim approximately every 3-5 years.

KEY
① This is a potential hazard. Correction is needed.
② Recommend further review and repairs by a certified professional or licensed contractor.
③ Recommend servicing, repair and monitor as future issues may occur.
④ Maintenance needed. Contact a qualified professional.
⑤ Upgrades are recommended for safety.
⑥ Recommend further review by a qualified licensed engineer.
⑦ Refer to the current termite /pest inspection report.
⑧ Recommend monitoring. Future repairs may be warranted
⑨ Area not fully visible or accessible. Contact our office to re-inspect once access is made available.

12 Grading

Site slope: ● **LEVEL / MINOR SLOPE** ❑ MODERATE SLOPE ❑ MAJOR SLOPE

● ***SLOPE OF THE SOIL, DRAINAGE AND CLEARANCES OF THE SOIL ALONG THE PERIMETER OF THE HOME APPEAR SERVICEABLE.**

❑ Poor site drainage / evidence of potential ponding of water on property and/or along areas of the building perimeter.④③
❑ Some suspected soil instability, possible settlement of the site noted. Recommend further review and upgrades or repairs.②⑥

● **Plants or Trees touch the house and/or roof. Proper landscape maintenance /recommend. ③④**
❑ Site grading and foundation perimeter along areas of the house are not fully visible due to overgrown landscaping. ③④
❑ *Evidence of soil erosion from rain or site water with movement of the topsoil. Recommend erosion control.③④

COMMENTS: **Off-site water (i.e. street water, water from a neighboring property, or sub-surface water) influences onto this property are outside the scope of this inspection and are not addressed. If concerned, have evaluated by a licensed geotechnical engineer.**

TYPICAL LANDSCAPE MAINTENANCE
This should consist of trimming trees and plants from contact with the house or roof and air conditioner compressors (if applicable). A minimum of 6 inches is recommended from hedges and vines from the wood portions of your home and 12+ inches from A/C compressors. Clear all rain gutters and roof build-up of leaves, and clean sub-surface drains at least annually.

● **SOIL LEVEL FOUND HIGH AT AREAS OF THE FOUNDATION. (Recommend 4 - 6 inches from the bottom of the exterior siding or stucco to dirt, rock, mulch or wood chips) ④ @ SOUTHSIDE See photo page**

❑ **EARTH-TO-WOOD CONTACT NOTED AT AREAS OF THE EXTERIOR SIDING OR TRIM. Proper landscape grading warranted ④⑦**
Recommended clearances to soil: ☒ SIX inches from wood siding ☒ FOUR inches from stucco and / or SIX inches from house floor

❑ **INSUFFICIENT SLOPE OF THE SOIL AWAY FROM THE BUILDING. THE SLOPE OF THE SOIL SHOULD ALLOW FOR THE WATER TO FREELY FLOW AWAY FROM THE BUILDING AND NOT ALLOW THE WATER TO FLOW TOWARDS OR ALONG THE FOUNDATION, POND OR PUDDLE. ④**

● ***RECOMMEND SOME "MINOR" LANDSCAPE GRADING AND MAINTENANCE ALONG AREAS OF THE EXTERIOR. THIS SHOULD HELP ENSURE THE PROPER FLOW OF SITE WATER AWAY FROM THE BUILDING(S) AND OFF OF THE PROPERTY. THIS WILL ALSO HELP PREVENT AN EXCESSIVE MOISTURE CONDITION AND HELP MAINTAIN THE PROPER CLEARANCES FROM THE STUCCO OR WOOD SIDING TO THE SOIL.**
❑ Surface drains noted but not tested / termination unknown. Keep clean and free of debris regularly.④③

*Note: Geological conditions or site stability are outside the scope of this inspection. For further information contact a licensed geological engineer.

This detail is recommended for stucco

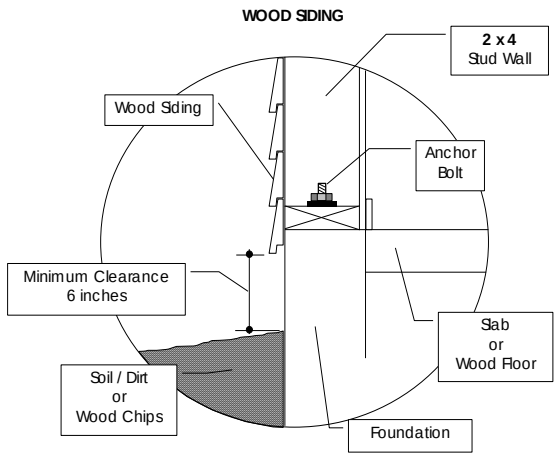

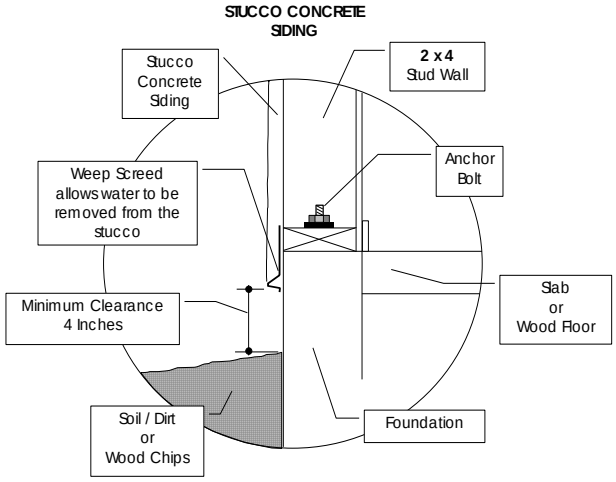

COMMENTS:

KEY
① This is a potential hazard. Correction is needed.
② Recommend further review and repairs by a certified professional or licensed contractor.
③ Recommend servicing, repair and monitor as future issues may occur.
④ Maintenance needed. Contact a qualified professional.
⑤ Upgrades are recommended for safety.
⑥ Recommend further review by a qualified licensed engineer.
⑦ Refer to the current termite /pest inspection report.
⑧ Recommend monitoring. Future repairs may be warranted
⑨ Area not fully visible or accessible. Contact our office to re-inspect once access is made available.

13 Foundation

Foundation Type: ● **POURED CONCRETE** ❍ MASONRY BLOCK ❑ PIERS / POST AND PAD

● ***NO VISIBLE DEFECTS FOUND** ● Disclosure -Common cracks visible in the concrete foundation.⑧

● **FOUNDATION PERIMETER NOT FULLY VISIBLE.** ⑧

❑ Some deterioration of the foundation noted. This appears typical of the age. However, upgrades are recommended to help prevent additional deterioration, damage or compromise. Contact a licensed concrete foundation specialist to evaluate and make recommendations.② ❑ Some minor / moderate settlement of the foundation visible②③

❑ Some moderate cracks and displacement of the foundation noted. This may be inductive of unusual settling or movement of the soil around the foundation②

❑ Exposed footing where the soil was removed from along areas of the foundation system. This can affect the integrity of the house foundation.②

*Notice: No engineering of the foundation and / or any structural component in the crawlspace or basement is performed. If concerned have tested.

14 Slab Floor

*Notice: Moisture intrusion from under the slab cannot be determined and is outside the scope of this inspection.⑧

● ***NO VISIBLE DEFECTS FOUND.** However slab is not visible due to floor coverings. Cracks and Conditions under flooring not determined ⑧

❑ Unusual cracks with displacement / Moisture stains noted under flooring. Full condition not determined. ②

❑ Disclosure – Exposed metal foundation straps subject to corrosion found along areas of the foundation. ③④

15 Crawlspace / Basement N/A

Floor construction: ❑ JOISTS ❍ TRUSSES ❍ POST & BEAM / ❑ Framing not fully visible.⑧
Framing construction: ❑ WOOD ❑ STEEL / ❍ Cripple walls ❍ Shear walls

❑ ***APPEARS SERVICEABLE** **Access location:**

*Notice: No engineering of the foundation and / or any structural component in the crawlspace or basement is performed. If concerned have tested.

❑ Access, visibility, and inspection were limited in the crawlspace area due to lack of adequate clearances / occupant's stuff. ⑨

❑ Rusted, Deteriorated and/or Damaged metal foundation piers. Some metal foundation piers appear to be below the winter water level in the crawlspace. Recommend replacement of damaged piers and adding additional pads to lift the newer piers above water level where needed. ②

❑ Some of the metal foundation piers are found to be improperly installed throughout the crawlspace areas. Some of the adjustment screws are over extended past the maximum standard which can affect the structural integrity. Recommend further review and repairs by a qualified / licensed manufactured housing installation contractor. ①

❑ Earth-to-wood contact found in areas of the crawlspace. Upgrades recommended. Refer to termite report for locations.③⑦

❑ Moisture and/or bug type deterioration and/or damage found in crawlspace areas at wood framing. ②⑦

❑ Cellulose & Debris noted in the crawlspace. Recommend cleaning ③⑦

❑ Engineer recommended to evaluate the deterioration and/or damage to the foundation and crawlspace framing.②⑥

❑ **VENTILATION APPEARS ADEQUATE** ❑ Rusted, Damaged or Missing vent screens for crawlspace.④

❑ Damaged exterior crawlspace ventilation screens found in need of repair to help prevent critter intrusion.③④

❑ Improper amount of ventilation found for the crawlspace - Recommend additional ventilation for the crawlspace areas. ②

❑ Unscreened opening(s) into crawlspace areas needing to be filled or screened to help prevent critter intrusion.③④

❑ **Disclosure - Evidence of moisture and/or seasonal ponding of water visible in the crawlspace. ③②

❑ A properly installed sump pump system, proper exterior landscape grading, additional or mechanical ventilation in the crawlspace, and/ or a properly installed vapor barriers are examples of potential upgrades for the crawlspace.②

❑ **ANCHOR BOLTS INSTALLED** - Anchor bolts not fully visible / not all anchor bolts inspected ③

❑ No foundation anchor bolts found due to age of the structure. Seismic upgrades recommended.②

N/A- **MODULAR / MOBILE HOME APPEARS TO HAVE A PERMANENT TYPE FOUNDATION INSTALLED. (CHECK WITH LOCAL AUTHORITY (COUNTY OR CITY) FOR "433" VERIFICATION)**

❑ Recommend re-leveling and servicing the manufactured home foundation pier system. Uneven areas noted at areas of the interior floor. ③

❑ Manufactured home is anchored for earthquake safety but is not considered a permanent-type foundation). Upgrades recommended. ⑤

❑ ***INSULATION INSTALLED:** (APPROX.)__inches thick- (*Note: Crawlspace framing is not fully visible due to the insulation. A full evaluation for moisture and/or bug type damage is warranted / recommended by a licensed Termite Inspection Co. /A wood destroying organism report warranted)

❑ No insulation installed in the crawlspace (Recommended as an energy upgrade)

❑ Loose & hanging insulation in crawlspace. ④③ ❑ Loose & damaged vapor barrier in crawlspace. (Repair warranted)③

****WATER IN THE CRAWLSPACE**

There should be no standing water allowed in the crawlspace. If an excessive water condition exists it can cause moisture damage or deterioration to wood or metal framing; or worse, it can cause settling of the foundation or mold. Proper landscape grading, diverting gutters and downspouts away from the building, installing sump pumps if necessary, and providing proper or additional ventilation may help to maintain a controlled environment in your basement or crawlspace②.

KEY
① This is a potential hazard. Correction is needed.
② Recommend further review and repairs by a certified professional or licensed contractor.
③ Recommend servicing, repair and monitor as future issues may occur.
④ Maintenance needed. Contact a qualified professional.
⑤ Upgrades are recommended for safety.
⑥ Recommend further review by a qualified licensed engineer.
⑦ Refer to the current termite /pest inspection report.
⑧ Recommend monitoring. Future repairs may be warranted
⑨ Area not fully visible or accessible. Contact our office to re-inspect once access is made available.

16 Roof Components

Roof style:
● **GABLE** ● **HIP** ❑ FLAT ❑ LOW SLOPE
❑ SINGLE SLOPE ❑ MANSARD ❑ BARN-GAMBREL

How inspected:
❑ WALKED
● **VIEWED FROM GROUND OR LADDER --**
(*Not fully visible due to roof type or pitch. Walking may cause damage. ②)

 # OF VISIBLE LAYERS FOUND: (AT LEAST 1)
(NO MORE THAN 2 LAYERS ARE ALLOWED)

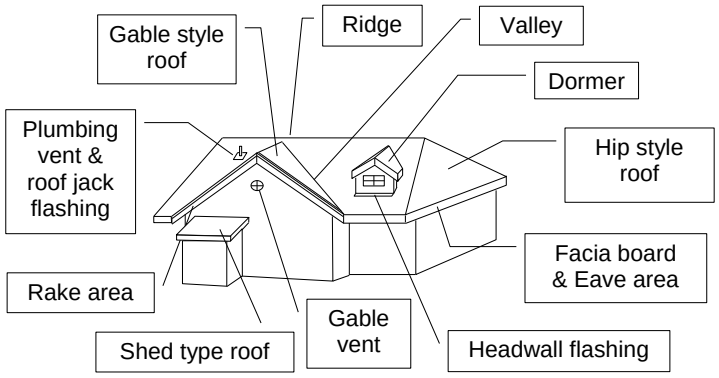

17 N/A

Type: ❑ **ASPHALT COMPOSITION SHINGLE** (30-YEAR TYPE ROOF MATERIAL WITH 5-7+/- YEARS OF WEAR)

❑ **ROOF MATERIAL APPEARS WITHIN USEFUL LIFE EXPECTANCY** -*However unable to determine if roof is actively leaking ③*
❑ Damaged / deteriorated / missing roof shingles. Typical roof maintenance is recommended / warranted. This usually consists of repair / replacement of all damaged and/or missing roof shingles. This maintenance will help to ensure water tightness of the roof and should be performed regularly. ②
❑Roof is older and may be nearing the end of its useful life but the general condition of the roof appears serviceable with signs of weathering & aging—ongoing maintenance and inspection is advised.③
❑ Visible past roof repairs noted. Some repairs do not appear to be professional and are suspect as to the effectiveness and/or proper use of roofing materials. Suspected improper roof repairs.②
❑ Improperly installed / exposed fasteners / nails.④②
❑ Holes & openings in roof material with exposed / deteriorated tar paper at roof② ❑ Roof is weathered and deteriorated. ②
❑ Unusual deterioration and/or cracking of the roof shingles. Potentially a defective material.②
❑ Roof material appears to be improperly installed.②
❑ Suspected roof leak. Visible evidence of moisture type damage at areas of roof overhang at: ②⑦

18 HOUSE AND GARAGE

Type: ● **CONCRETE TILE** ❍ ***CLAY TILE** ❍ **METAL** ❍ **SLATE** ❍ **FIBERGLASS PANELS**

● **ROOF MATERIAL APPEARS WITHIN USEFUL LIFE EXPECTANCY** -*However unable to determine if roof is actively leaking ③*
❑ (MANY) –Cracked, damaged, Loose, displaced and/or separated roof tiles needing repair or replacement. Contact a licensed roofing contractor to further evaluate the entire roof to determine location(s) and quantity of the roof tiles needing repair or replacement and potential other defects which may not be visible or discovered at this time.②
❑ (A FEW-)Loose, displaced roof tiles needing repair found missing the required approved fastener or nails at areas of the tile roof. Recommend further review of the entire roof by a qualified / licensed roofing contractor to determine quantity and repair as needed.
❑ Evidence of some suspected roof leaks with visible moisture and/or water type stains found at areas of the eave plywood

19 N/A

Type: ❍ **ROLLED ASPHALT COMPOSITION** - (20-YEAR TYPE ROOF MATERIAL WITH +/- YEARS OF WEAR)
❍ **METAL (COATED OR PAINTED)** ❍ **BUILT UP ROCK (TAR & GRAVEL)** ❍ **SHEET (SYNTHETIC /SINGLE PLY)**

❑ **ROOF MATERIAL APPEARS WITHIN USEFUL LIFE EXPECTANCY** –*However unable to determine if roof is actively leaking③*
❑ Exposed, bare areas noted where the aggregate or rock has been removed exposing the tar material underneath through wind, rain or other influences in areas or the rock roof where rock was not originally installed well. Areas of the roof found to be deteriorated and prone to further sun damage needing repair or maintenance. General roof repairs and maintenance warranted. This usually consists of covering exposed / bare areas of the roof with additional roof coating and aggregate material. This maintenance will help to ensure water tightness and should be performed regularly (and inspected annually).
❑ General roof repairs and maintenance is warranted. Repair open, blistered seams, loose edges and/or separations of the roof material. ②④
❑ Open roof seams and buckling found at the rolled composition roof material. This is considered a defective installation and could lead to roof leakage with deterioration and /or damage. Recommend further review and repairs by a qualified / licensed roofing contractor
❑ Evidence of overheating of the torch-down roofing material. Excessive cracking of the rolled roof material noted. Suspected defective installation. This may shorten the overall life of the roofing material Recommend further review by licensed roofer. ②
❑ Improperly installed / exposed fasteners or nails at roof material.②

KEY
① This is a potential hazard. Correction is needed.
② Recommend further review and repairs by a certified professional or licensed contractor.
③ Recommend servicing, repair and monitor as future issues may occur.
④ Maintenance needed. Contact a qualified professional.
⑤ Upgrades are recommended for safety.
⑥ Recommend further review by a qualified licensed engineer.
⑦ Refer to the current termite /pest inspection report.
⑧ Recommend monitoring. Future repairs may be warranted
⑨ Area not fully visible or accessible. Contact our office to re-inspect once access is made available.

20 Exposed Flashings

N/A SKYLIGHTS APPEAR SERVICEABLE

● **EXPOSED FLASHINGS APPEAR SERVICEABLE** - Flashings not fully visible ③⑧
❑ Recommend resealing or sealing roof flashings as part of needed maintenance.②④
❑ Deteriorated and/or missing sealant at roof jack flashings. Maintenance is recommended.④
❑ Exposed mastic or tar type product subject to deterioration / not protected at areas of roof. Maintenance recommended.④②
❑ Exposed / Loose / Lifting nails or fasteners at exposed areas of roof flashings needing repairs and maintenance. ④②
❑ Recommend proper kick-outs at the bottom of the side headwall channel or step flashings. This can help eliminate the discoloration of the exterior siding. Recommend further review and repairs by a licensed roofing professional. ②③
❑ Evidence of heavy debris buildup on areas of the roof and/or roof valley flashings. Areas not fully visible, continuous maintenance / cleaning warranted to help prevent roof leakage. ⑧④

Roof Maintenance Tips: An annual Inspection and maintenance of all flashings, roof coverings, supports for TV antenna/satellite dishe. as well as a visual inspection of overhead electrical wires should be performed. Sealing of all roof flashings should be done at least every two years ("Henry's" Roof Cement). If your overhead power lines are passing through trees, contact your local utility company to trim the tree from around the wires.

DISCLOSURE:

Roof, flashings, skylights or any component of the roofing systems were not water tested for leaks. This roof evaluation is a general opinion of the overall condition. This evaluation is in no way a warranty or guarantee. Roof leaks may occur during certain weather, which may not be detectable during this inspection. A roof in excellent condition may still leak with no prior indication depending on certain weather (i.e. rain).

Note: The roofing contractor may discover additional roofing defects during repairs or additional inspections. If any roof defect is discovered during this inspection which requires further review by a licensed roofing contractor, the entire roof should be evaluated for additional defects which may not be addressed or discovered at this time.

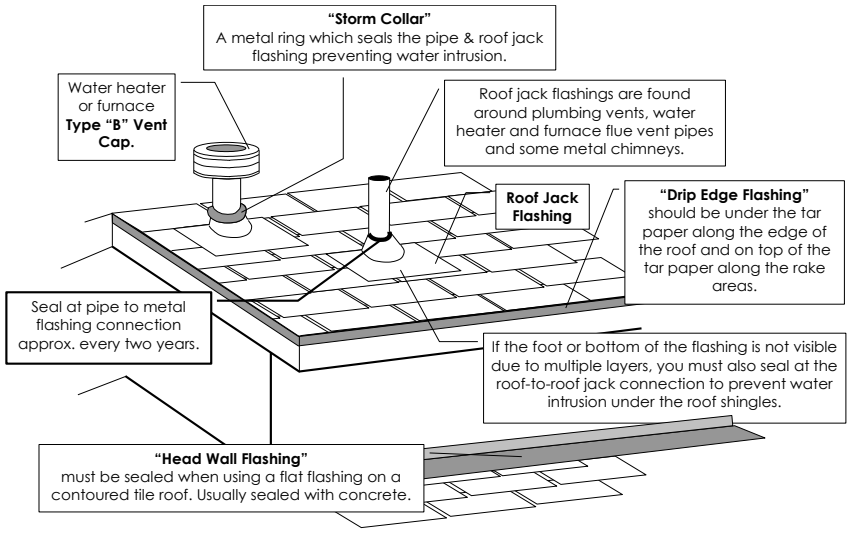

21 Gutters & Downspouts

● **FULL RAIN GUTTER INSTALLATION** ❑ **DISCLOSURE-NO RAIN GUTTERS INSTALLED**
● **APPEAR IN SERVICEABLE CONDITION** ❑ Recommend installing rain gutters in appropriate areas as an upgrade
● **Recommend typical rain gutter maintenance: cleaning, sealing and/or re-fastening of loose gutters and downspouts) ③**
❑ Recommend splash blocks & diverting downspouts to assist in proper flow of roof water away from the house where not installed,③
❑ Loose / Damaged / Deteriorated / Missing rain gutter(s) downspout: ③
☒ *Note: Some downspouts may enter into subsurface drain system where terminations are not visible and are not tested. Service often.* ⑧④

22 Attic PARTIAL

● **ENTERED ATTIC** ❑ **VIEWED ATTIC FROM ACCESS - ATTIC TOO SMALL FOR FULL ACCESS** ⑧
❑ Disclosure-typical Moisture stains noted in areas of attic. ③⑦
Access Location: UPSTAIRS HALL ❑ Damaged attic access cover: ③ ❑ Disclosure - No attic access provided. ⑧
● **NO VISIBLE FRAMING DEFECTS FOUND**③ ❑ Attic framing found damaged. Repairs warranted: ②⑥
● **ATTIC VENTING APPEARS ADEQUATE** ❑ Attic not fully visible due occupant's belongings.③
❑ Poor attic ventilation found. Recommend additional attic ventilation as an upgrade. Contact a roofer for recommendations. ②
❑ Disclosure-Some Attic eave / gable vent screens found rusted, damaged and/or missing. Repairs warranted to help prevent critter intrusion into attic areas. ③ ❑ An unprotected opening into the attic needs to be sealed or screened per standards: ③
❑ Attic fan / power ventilator installed. ❑ Unable to test the attic power ventilator , Thermostatically controlled. Too cold today③
● **INSULATION PROVIDED TYPE: BLOWN**
APPROX. DEPTH 10-12 +/- inches. Attic not fully visible due to insulation ③ ❑ No attic insulation found (Upgrades recommended).

KEY
① This is a potential hazard. Correction is needed.
② Recommend further review and repairs by a certified professional or licensed contractor.
③ Recommend servicing, repair and monitor as future issues may occur.
④ Maintenance needed. Contact a qualified professional.
⑤ Upgrades are recommended for safety.
⑥ Recommend further review by a qualified licensed engineer.
⑦ Refer to the current termite /pest inspection report.
⑧ Recommend monitoring. Future repairs may be warranted
⑨ Area not fully visible or accessible. Contact our office to re-inspect once access is made available.

23 Water Service Main

Type (visible portions): ● COPPER ❍ GALVANIZED ❍ PLASTIC ☒ NOT FULLY VISIBLE
Approx. water pressure: 70 -psi +/- (Preferred water pressure is between 30 & 80 psi)
➲ MAIN WATER SHUTOFF LOCATION: NORTHEAST CORNER SIZE: 1 INCHE(S) ☒ MAIN WATER SHUT-OFF VALVE NOT TESTED ⑧
● Disclosure: **PRESSURE REGULATOR INSTALLED.**
❑ Excessive water pressure (above the maximum of 80 psi, currently at: psi). Recommend the adjustment or repair or installation of the pressure regulator. ② ● **Exposed plumbing pipes at / or near the main shut-off subject to freezing found not insulated ④**
❑ Active water leak noted at the main water supply pipe or valve. ② ❑ Handle missing / damaged at the main water shut-off ③
● **WATER SOFTENER INSTALLED** --(Water condition and quality not tested) ● **Recommend servicing water softener, low on salt and dirty.④**
● **Missing the required air gap at water softener drain hose at waste connection per standards ⑤ See photo page**

24 Supply lines

Type: ● COPPER ❍ *GALVANIZED ● PLASTIC ❍ NOT VISIBLE / NOT DETERMINED
❑ *Disclosure: Suspected corrosion & flow restriction due to age of pipe.②③
● **APPEARS TO BE WITHIN EXPECTED LIFE** (not fully visible③) ❑ Pipes lack proper support in walls. (Water hammer noted)②
❑ Disclosure: Loss of water flow when using multiple fixtures.③ ❑ Pipes lack proper support in basement or crawlspace③
❑ Disclosure: Plastic PVC pipe used above ground for faucet or supply piping – (fragile & not UV rated) ③
❑ Disclosure: Exposed plumbing pipes subject to freezing are not insulated ③④ ❑ Active water leak found at: ②
❑ *Disclosure: Average life or galvanized supply piping is approx. 50 years +/- ③ ❑ Copper-to-galvanized pipe cross connection: ②
*Notice: All Pipe conditions inside walls, underground / slab, inaccessible areas, areas under insulation cannot be judged. Water testing not performed.
Notice: Be advised that some "polybutylene" plastic piping systems have experienced problems. Contact a licensed plumber for further information.

25 Waste lines

Type: ❍ COPPER ❍ *GALVANIZED & CAST IRON ● ABS OR PVC TYPE PLASTIC -DWV
❑ *Suspected corrosion & flow restriction due to age of the galvanized / cast iron pipe.②③
● **APPEARS TO BE WITHIN EXPECTED LIFE** (not fully visible③)
❑ Sewer pipes lack proper support in basement / crawlspace③
❑ Active water leak(s) in sewer pipe found at ①②: ❑ Insufficient fall for drainage / standing water in pipe at sewer piping in: ②
❑ Open waste or sewer line needing to be capped / repaired ②①:
❑ Improper plumbing waste trap under sink ② : ❑ Improper plumbing waste vent pipe termination②:
❑ Exposed plastic sewer piping extending through the roof found not painted or UV protected per standards. ④③
❑ *Recommend scoping the underground sewer piping. Suspected deterioration due to age and/or potential root intrusion.②
❑ *Disclosure: Average life or galvanized / cast iron waste piping is approx. 50 years +/-. ③
Notice: Pipe conditions inside walls, underground, in slab, or inaccessible areas cannot be judged. Underground pipes for sewer systems not inspected②

26 Fuel System

SHUTOFF VALVE LOCATION: NORTHEAST CORNER Type: ● NATURAL GAS ❑ LP-GAS
❑ A proper cap missing at an unused gas valve per standards at the LAUNDRY. ①
● **SHUT-OFF APPEARS SERVICEABLE** (valve not tested)③ ❑ Disclosure: Gas pipe not protected / sleeved through concrete at meter.⑧
❑ Gas system was not on for this inspection. Contact our office to test and inspect all gas burning appliance once service has been restored.②
❑ Gas meter in contact with soil. Deterioration may occur.④③ ❑ Gas pipes at meter found corroded④③
Notice: Gas piping and valves not tested during this inspection. (Visual inspection only). ❑ The GAS CO. has recently determined that an

27 Hose faucets

☒ Anti-siphon valves recommended on exterior hose faucets where not installed. ⑤
❑ Broken / Missing handles at exterior hose faucet(s): ④
● **OPERATED WHEN TESTED** ❑ Some exterior hose faucet(s) leaks / drips at handle when on. General maintenance is

28 Laundry

Location: ● SERVICE AREA ❍ GARAGE ❍ EXTERIOR ENCLOSURE ❍ BASEMENT
❑ Improper Surface draining of the added laundry gray water drain system. ①②
● **PIPING / WASTE WATER PROVIDED (NOT FULLY VISIBLE- NOT TESTED)** ❑ Active water leak at HOT / COLD supply valve at laundry.②
● **ELECTRICAL OUTLET PROVIDED** ❑ Unable to test 110 – 240 volt outlet due to occupants stuff.②
❑ **240-VOLT OUTLET PROVIDED** ● Disclosure: No 240-volt outlet provided for laundry. ❑ Laundry 240-volt outlet found non-operational ②
● **GAS PIPING PROVIDED** ❑ Disclosure: No gas provided for laundry ❑ Area behind laundry machines not fully visible due to laundry machines .⑧⑨
● **DRYER VENT PROVIDED- DRYER VENT NOT TESTED / NOT FULLY VISIBLE.**③ ❑ No vent provided for laundry dryer.②⑤
❑ Recommend cleaning the laundry dryer vent pipe.④⑤ ❑ Damaged laundry dryer vent cap. Recommend replacement.②
❑ Dryer vent improperly terminates in the crawlspace.②① ❑ Improper use of flex dryer vent through crawlspace / attic.②①
● **- LAUNDRY SINK APPEARS SERVICEABLE** ❑ Slow draining found at the Laundry sink is loose at wall / damaged / cracked / leaks③
❑ **PLUMBING BELOW SINK SERVICEABLE** ● **Disconnected / leaking piping found below garage sink② See photo page**
● **FAUCET SERVICEABLE** ❑ Laundry sink faucet leaks / drips ❑ Faucet is damaged / non-operational②
Notice: Laundry machines not inspected or moved for inspection. Laundry water valves and drain not tested (Visual inspection only).

KEY- Refer to page "Preface" Page one of this report

29 Water Heater(s)

Location: **A:** *GARAGE – TANKLESS - NATURAL GAS*

YEAR / SIZE: A: 2018 / ? **GAL. B:** _____ / _____ **GAL. C:** _____ / _____ **GAL.**

● **OPERATED**

● **WATER HEATER SHUTOFF VALVE INSTALLED** (valve not tested)

● **COMBUSTION AIR SERVICEABLE** ❑ Improper amount of combustion air provided for the water heater enclosure per standards.②③

● **VENT FLUE PIPE SERVICEABLE** ❑ Water heater vent pipe too close to combustibles through drywall ceiling / attic framing. (1-inch min. required) ②

❑ The Water heater "B" vent pipe found improperly cut altered at roof termination. Repairs recommended. Contact a qualified professional. ①

● **VENT CAP SERVICEABLE** ❑ Water heater vent cap found damaged. Recommend replacement or safety.①②

N/A **ENCLOSURE / PLATFORM SERVICEABLE** ❑ Moisture stains / damage at drywall areas at water heater enclosure ①②⑦

N/A **WATER HEATER FOUND STRAPPED AND/OR BRACED TO PREVENT MOVEMENT.**

❑ Water heater is improperly, loosely or NOT strapped & not secured well - moves when pushed. Recommend adding proper STRAPPING & BLOCKING to the wall to properly secure the tank per Uniform Plumbing Code. ②

● **WATER HEATER TPR (TEMPERATURE PRESSURE RELIEF) VALVE INSTALLED** / pipe is missing / not installed ①②. / pipe found improperly reduced in size (3/4 inch pipe minimum is required). ①② / pipe improperly terminates. Must terminate downward at exterior within 6 to 24 inches from the ground -(too short) ①② / pipe improperly flows uphill from TPR valve. ①② / pipe found improperly installed / not welded or fastened together at some joints. ②①

❑ Recommend a catch pan under the water heater as a upgrade.

❑ Improper/ unsafe use of a plastic PVC sprinkler pipe for the water heater safety TPR (temperature pressure relief) system. This is a potential safety hazard. Replacement warranted per standards .①②

❑ Gas is off at water heater today. Hot/ Cold not tested at faucets throughout home. Contact our office to re-inspect once gas service is restored.②

❑ Water heater found to be potentially unsafe / a visible hazardous condition. Evidence of past flame / heat roll-out from burn chamber.①②

❑ Water heater vent connector pipe (single wall) is not properly fastened with the required 3- fasteners at each connection including the draft hood per standards. Corrections are needed for safety per standards. ①②

Water Heater Components

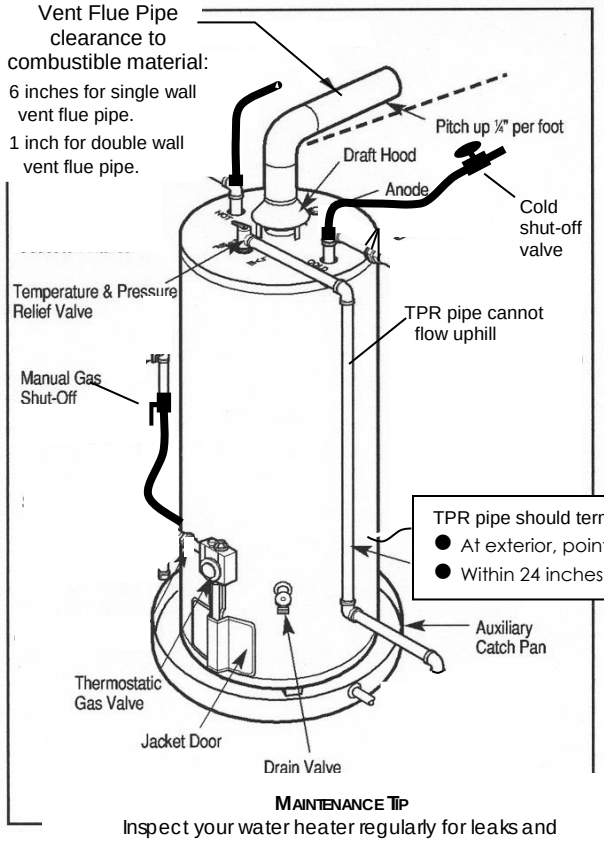

MAINTENANCE TIP

Inspect your water heater regularly for leaks and deterioration. You should also drain your water heater annually from the drain valve using a standard garden hose. Drain the tank for about 5-15 minutes. Draining the sediment buildup will help provide a long and efficient life (approx. 10-15 years).

Water Heater Strapping Recommendations
Straps required at top 1/3 and bottom 1/3

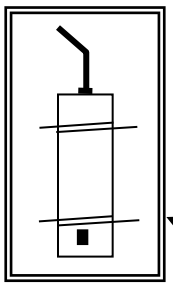

Recommend wrapping the straps completely around the unit and/or bracing to the wall to prevent any horizontal movement at the top 1/3 and bottom 1/3.

Flat wall installation (TOP VIEW)

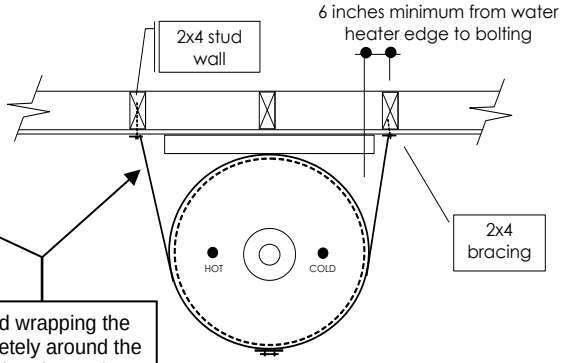

Corner installation (TOP VIEW)

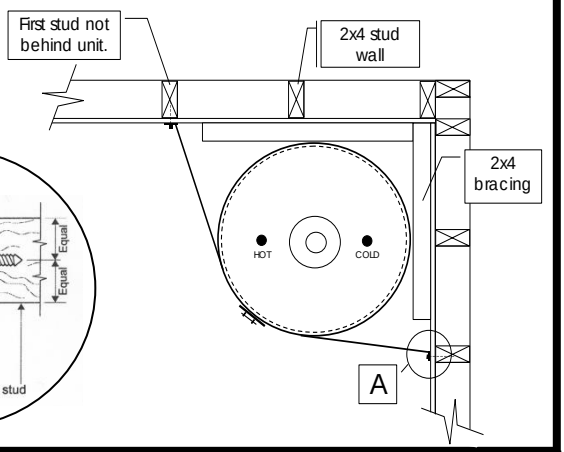

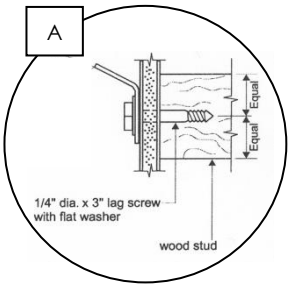

KEY
① This is a potential hazard. Correction is needed.
② Recommend further review and repairs by a certified professional or licensed contractor.
③ Recommend servicing, repair and monitor as future issues may occur.
④ Maintenance needed. Contact a qualified professional.
⑤ Upgrades are recommended for safety.
⑥ Recommend further review by a qualified licensed engineer.
⑦ Refer to the current termite /pest inspection report.
⑧ Recommend monitoring. Future repairs may be warranted
⑨ Area not fully visible or accessible. Contact our office to re-inspect once access is made available.

30 Heating System

Approx. BTU: **A:** 75,000 **B:**_____ **C:**_____

LOCATION A: ATTIC

Heating type:
● Forced air ❑ Package unit
❑ Floor / Gravity ❑ Heat pump
❑ Wall / Gravity ❑ Radiant

Fuel type:
● Natural gas ❑ Oil / Coal
❑ LP-Gas
❑ Electric

LOCATION B:_____

Heating type:
❑ Forced air unit ❑ Package
❑ Floor / Gravity ❑ Heat pump
❑ Wall / Gravity ❑ Radiant

Fuel type:
❑ Natural gas ❑ Oil / Coal
❑ LP-Gas

LOCATION C:_____

Heating type:
❑ Forced air ❑ Package unit
❑ Floor / Gravity ❑ Heat pump
❑ Wall / Gravity ❑ Radiant

Fuel type:
❑ Natural gas ❑ Oil / Coal
❑ LP-Gas
❑ Electric

31 Condition

❑ Gas service is off today - Unable to fully inspect or test furnace. Contact our office to re-inspect once gas service is restored.②

● **FURNACE OPERATED WHEN TESTED** ❑ Furnace did not respond to normal controls. Further review warranted.②
❑ Furnace found potentially defective / Unsafe ②: Unit appears to cycle on its limit switch (hazardous)
❑ Furnace does not appear to have been serviced recently per manufacturer's recommendations. Recommend cleaning & servicing.②④
❑ A slight smell of gas around the furnace area. Contact Gas Co. ①②

32 Venting

❑ Heavy soot or rust found in furnace vent pipe (potential defective furnace)②①
❑ Back-venting of the furnace exhaust noted (hazardous condition)②①

● **APPEARS SERVICEABLE AT VISIBLE AREAS** not fully visible③
❑ Furnace vent pipe lacks proper clearance to combustible material through the roof. ②⑤
❑ Missing / Recommend a proper storm collar per standard at the furnace vent pipe at the roof termination. ③
❑ Damaged / Missing furnace vent termination cap at the roof.② ❑ Improper horizontal rise of the furnace vent pipe.②
❑ Some rusting found around the furnace vent termination/ draft hood. Recommend further review with maintenance and/or

33 Combustion Air

❑ Recommend cleaning the combustion air grills. Grills found dirty & partially blocked at / in the furnace enclosure.④

● **APPEARS TO BE PROPER AMOUNT** ❑ Combustion & return air found mixing at furnace. Hazardous②
❑ Inadequate or improper amount of combustion air found for the furnace enclosure.②
❑ Recommend adding weather stripping to the furnace enclosure door and caulking heater at the platform as safety upgrade per current standards.⑤

34 Burners / Flame

❑ Damaged / Deteriorated "Nox" Rods found inside the furnace burn chamber. ②①⑤
❑ Unable to inspect / closed system / system not functional at this time.②

❑ **FLAME APPEARS SERVICEABLE** ❑ Soot or Rust found in the furnace burn chamber.②
❑ Unusual flame color & pattern found at furnace when tested. (potentially this is a defective furnace)②①
❑ Improper installation of the flex gas connector through the metal sidewall of the furnace cabinet. Upgrades recommended. ②①
☒ *Notice: The heater was not dismantled or tested for a crack in the heat exchanger. This is beyond the scope of a home inspection. If furnace is older you should have the heat exchanger checked by a licensed HVAC professional.* ①
Notice: Safety switches such as thermocouples are not tested. Carbon Monoxide testing is beyond the scope of the inspection and is not performed.

35 Distribution

Type: ● *__DUCTS & REGISTERS__ ❑ GRILL ❑ PIPES / TUBES ❑ RADIANT WITH FAN ❑ BASEBOARD
☒-Conditions inside ducting not visible and are unknown*②① (not part of this inspection)

● **APPEARS SERVICEABLE AT VISIBLE AREAS -** (not fully visible)-③
❑ Ducting found in contact with soil in crawlspace. Proper strapping warranted. Deterioration has or may occur if not corrected. ②
❑ Loose, damaged plastic wrapping and insulation around the heating ducting in the attic / crawlspace ②
❑ Low air volume and temperature noted from heating registers. Suspected defect in ducting. Have reason verified by certified HEATING professional:
❑ Loose or disconnected ducting found in the crawlspace / attic②
❑ Loose grill(s) found at the wall furnace is considered a potential hazard. Repairs warranted: ⑤
*Determining if insulation around the ducting in pre 1979 homes contains asbestos is not part of this inspection. ②
Notice: * Certain dirty ducting systems have been known to have some bio-hazards and/or carcinogens. Cleaning and servicing is recommended. ④①

KEY
① This is a potential hazard. Correction is needed.
② Recommend further review and repairs by a certified professional or licensed contractor.
③ Recommend servicing, repair and monitor as future issues may occur.
④ Maintenance needed. Contact a qualified professional.
⑤ Upgrades are recommended for safety.
⑥ Recommend further review by a qualified licensed engineer.
⑦ Refer to the current termite /pest inspection report.
⑧ Recommend monitoring. Future repairs may be warranted
⑨ Area not fully visible or accessible. Contact our office to re-inspect once access is made available.

36 Normal Controls

❑ Unable to test the thermostat-utilities / pilot off② ❑ Poor thermostat location④

● **THERMOSTAT OPERATED WHEN TESTED** ❑ Furnace thermostat found loose / damaged on the wall.④
❑ Furnace blower door safety switch is damaged / missing ①② ❑ Thermostat not fully visible due to furniture ③
❑ Low batteries at the furnace thermostat. ④③
Note: Thermostats not checked for calibration of temperature or time. Adequacy, efficiency or even room balance not part of this inspection.

37 Air Filters

AIR FILTER LOCATION: INSIDE HEATER IN RETURN AIR GRILL(S)

● **APPEARS CLEAN AND SERVICEABLE**: ❑ The furnace air filter is missing / not installed / wrong size / the air filter hold-down. ③
❑ Recommend changing or cleaning the furnace air filter ④③-(Needed maintenance) INSIDE THE FURNACE RETURN AIR GRILL(S)
Note Electric air cleaners, humidifiers, de-humidifiers are beyond the scope of this inspection. Have these systems evaluated by a HVAC professional.

38 Heating Notes

Notice: Determining if heating ducting contains asbestos is beyond the scope of this inspection.

❑ Recommend cleaning and servicing the furnace blower compartment & motor ④⑤ / and the A/C coil. ④⑤
❑ Recommend re-sealing the furnace plenums due to potential leaking and deteriorated sealant.④②
❑ Recommend further review of the entire heating system by a HVAC professional. ②
Note: Conditions or defects inside the ducting are beyond the scope of this inspection. Clean / service your heating system including ducting regularly.
Note: Sizing the unit (heating or cooling) for the size of the house is outside the scope of this inspection.

39 Evaporative Cooler N/A

Location: A:_____ B:_____ C:_____
❑ Unable to fully test unit swamp cooler. Unit is currently winterized or non-operational.②

❑ **OPERATED WHEN TESTED** ❑ Swamp cooler found non-operational / not functioning properly②
❑ Un-secure / Improper attachment of the swamp cooler to the house / roof②
❑ Swamp cooler found damaged & deteriorated / rusted / unsafe ②
❑ Float valve / pump non-operational as swamp cooler② ❑ Swamp cooler makes an unusual noise when tested. ④②
❑ Swamp cooler pads are deteriorated and damaged recommend replacement.②
❑ Interior of the swamp cooler found dirty, corroded and /or damaged. Recommend cleaning & servicing.②④
❑ Swamp cooler appears to leak at roof. Heavy water staining. Repair warranted②④

40 Air Conditioning

Compressor Location: **A:** SOUTHEAST CORNER
Compressor Location: **B:**

Size: 3 ton (Min. ampacity: 20 & Max. ampacity: 30 per placard) - At: 30 -amps in panel
Type: ● **SPLIT SYSTEM** ❍ **ELECTRIC HEAT PUMP** ❍ **PACKAGE UNIT** ❍ **WINDOW / WALL UNIT**

● **AIR CONDITIONER OPERATED WHEN TESTED -** Air temperature differential during test @: 18° F
❑ Air conditioner found not functioning properly, temperature differential is improper @ ° F Recommend servicing②
❑ Air temp. below 65° Fahrenheit, Unable to test (operating could cause damage) ② ❑ Unable to test ②
❑ The pad on which the air conditioner compressor is sitting has some soil erosion visible. Repairs recommended.②

POWER: ● **240 VOLT** ❍ **120 VOLT** ● **ELECTRICAL DISCONNECT PRESENT** ❍ **IN MAIN PANEL**
❑ Recommend weather tight conduit at the air conditioners compressor ⑤❑ Air conditioners compressor found not sitting level ②
❑ Damaged thermostat wires / Loose electrical disconnect at the air conditioners compressor. Recommend servicing. ②①
❑ Improper circuit breaker size installed for the air conditioners compressor in electrical panel per the manufactures placard / requirements: Currently at: -amps. Which is more than the Maximum allowed of: -amps. Recommend replacement of the current breaker to a new proper ()-amp per requirements.②

● **A/C REFRIGERANT LINES INSTALLED** --Lines not fully visible / not tested.③
❑ Insulation damaged or missing at areas of the Air Conditioner refrigerant piping at the coil in attic. This allows water to condensate and drip causing water stains and/or damage. Repairs or additional insulation needed.③

❑ Recommend sealing the hole or opening through the exterior wall where the Air Conditioner's refrigeration pipes enter the building. This will help prevent rodent, bug and water intrusion through this area per standards. ③④

● **A/C CONDENSATE PIPING INSTALLED** -Lines not fully visible or tested.③ ❑ Leaking or Disconnected condensate drip piping found: ②
❑ Improper termination of the Air conditioners condensate drip pipe into an open un-trapped sewer pipe in attic.①②
❑ Improper connection of the Air conditioner secondary condensate drip piping into the primary drain piping at coil in ATTIC.②
❑ **PRIMARY CONDENSATE DRIP PIPE TERMINATION**: Not located ② ❑ Recommend terminating the Air conditioner 's condensate pipe

KEY
① This is a potential hazard. Correction is needed.
② Recommend further review and repairs by a certified professional or licensed contractor.
③ Recommend servicing, repair and monitor as future issues may occur.
④ Maintenance needed. Contact a qualified professional.
⑤ Upgrades are recommended for safety.
⑥ Recommend further review by a qualified licensed engineer.
⑦ Refer to the current termite /pest inspection report.
⑧ Recommend monitoring. Future repairs may be warranted
⑨ Area not fully visible or accessible. Contact our office to re-inspect once access is made available.

41 Service

Type: ❍ OVERHEAD ● UNDERGROUND-(SERVICE WIRES NOT VISIBLE)
Volts: ❍ **120-VOLTS SYSTEM ONLY** ●**120 & 240-VOLT SYSTEM** ● **2-PHASE SYSTEM**

● **NO VISIBLE DEFECTS** ❑ Service wires too close to ground-(10ft.) / driveway-(12ft.) / pool-(22ft.) / roof-(1.5ft.) ②①
❑ Loose / Damaged electrical service connections at house / mast ② ❑ Damaged / Leaning electrical mast at roof.②
❑ Overhead main electrical service wires touch trees. Potential hazard.(Contact utility company) ③② ❑ No drip loop at mast ⑤

42 Main Panel

LOCATION OF MAIN PANEL: EXTERIOR ON THE NORTHEAST CORNER
● **A MAIN DISCONNECT INSTALLED** (not tested) ❑ N/A--(not required if less than 6 circuit breakers) ⑤

● **NO VISIBLE DEFECTS** - see notice below **MAIN DISCONNECT RATING:** 125 **AMPS** ❑ *Amps not determined (no main breaker)③
❑ Disclosure-More then 6 breakers without a main breaker ②⑤ ❑ Ground clamp or wire found loose / disconnected@: ②①
❑ **SOME VISIBLE ELECTRICAL DEFECT (S) FOUND IN THE MAIN ELECTRICAL PANEL. SEE NOTES BELOW①②.**
❑ Main electrical panel found locked, not accessible & not inspected at this time. Recommend further evaluation.②
● **GROUND PRESENT - in main panel-**(not tested / not fully visible) **-** However ground clamp / system connections not fully visible ③
❑ Electrical Earth grounding system appears not connected to the earth due to a newer plastic water line. Grounding rod recommended ②①
Note: Main panels with a service of less than 100 amps should be considered outdated and be upgraded by a licensed professional.

43 Conductor

SERVICE WIRES:	❍ **COPPER**	❍ **ALUMINUM**	● **UNABLE TO DETERMINE**
BRANCH WIRES:	● **COPPER**	❍ **ALUMINUM**	❍ **UNABLE TO DETERMINE**
Wiring methods:	● **NON-METALLIC**	❍ **KNOB & TUBE**	❍ **METAL / PLASTIC**

44 Sub-panels: A,B,C N/A

SUB-PANEL LOCATION*: # **A:**
B:

❑ **SUB-PANEL(s) : No visible defects** ❑ Visible defects found at sub-panel. See comments below in "panel notes" section.②①
❑ Sub-panel was not accessible (due to occupant's stuff) –could not inspect. Recommend further review once access is made available.②

45 Panel Notes

● **TYPE OF ELECTRICAL OVER-CURRENT PROTECTION DEVICES USED:** ● **BREAKERS** ❍ **FUSES**

❑ ***SOME VISIBLE ELECTRICAL DEFECT (S) FOUND. SEE NOTES BELOW. ALL ELECTRICAL DEFECTS ARE CONSIDERED SAFETY HAZARDS.** ①②
❑ Electrical panel defect / Over-fusing (breaker found too large for wire)-**(15 amp wire on a 20 amp breaker)** MAIN ELECTRICAL PANEL ②①:
❑ Improper / unsafe openings in the / Missing the dead front cover inside the MAIN ELECTRICAL PANEL are needing to be plugged for safety per standards ②①
❑ Breaker panel not fully or properly labeled for safety. (Repairs recommended for safety) ⑤: MAIN ELECTRICAL PANEL
❑ Unprotected / unused opening(s) through the BOTTOM of the MAIN ELECTRICAL PANEL needing to be sealed for safety per standards. This will help prevent critter intrusion into the electrical panel. ①②
❑ Missing bushing clamp as wires are passing into the MAIN ELECTRICAL PANEL ②①
❑ Neutral and ground wires improperly connected together in the SUB-PANEL ②①
❑ Evidence of a burnt, overheated or melted Neutral wire noted in the at the buss bar in the MAIN ELECTRICAL PANEL.②①
❑ Breaker is off at panel# (have reason verified by a licensed electrician)②: ❑ Antioxidant not visible / recommended on aluminum wiring⑤:
❑ Improper bundling of the Neutral wires at the bus in the MAIN ELECTRICAL PANEL. Improper bundling is when more than the maximum allowable 3- white wire of the same size are installed in the same lug in the bus bar. This can be considered a potential safety hazard. Correction is needed. Recommend repairs by a qualified / licensed electrical contractor. (See exampl at photo page)
❑ Improper installation of two wires on single wire rated circuit breaker②①: MAIN ELECTRICAL PANEL
❑ Aluminum wiring noted for general circuits. (Recommend all aluminum connections be checked by a qualified electrician.) ②①
❑ Direct tap (wires not protected by a breaker) / Improper installation of two wires in a single wire rated breaker in the ②①:
❑ Breaker(s) found damaged②①: ❑ Missing the required 240-volt split-branch coupler at breaker for safety ②①:
❑ Electrical system appears to be outdated by today's standards (upgrades recommended): Many ungrounded circuits noted throughout. Review of all circuits and outlets with the appropriate upgrades recommended. ②⑤
❑ Improper "phasing" noted at some circuit breakers in the MAIN ELECTRICAL PANEL. This is a significant hazard. Recommend further review and repairs by a qualified / licensed ELECTRICAL contractor. " Improper Phasing" is where two 110 volt wires "circuits" share the same neutral wire. This could lead to overheating of the white wire if the circuits were put under a heavy load / fire hazard. Easy repair by qualified electrical professional. ②① ❑ GFCI protection found non-operational at a GFCI Breaker ②①:
❑ Panel bond not provided or / not connected to the metal panel for safety ②①:

KEY
① This is a potential hazard. Correction is needed.
② Recommend further review and repairs by a certified professional or licensed contractor.
③ Recommend servicing, repair and monitor as future issues may occur.
④ Maintenance needed. Contact a qualified professional.
⑤ Upgrades are recommended for safety.
⑥ Recommend further review by a qualified licensed engineer.
⑦ Refer to the current termite /pest inspection report.
⑧ Recommend monitoring. Future repairs may be warranted
⑨ Area not fully visible or accessible. Contact our office to re-inspect once access is made available.

46 Wiring Notes

❑ *FURNISHINGS AND OCCUPANTS' BELONGINGS PREVENT TESTING OF EVERY OUTLET AND SWITCH. HAVE ALL OUTLETS AND SWITCHES TESTED ONCE HOME IS VACANT.* ⑨②

● **** "Sample" of fixtures, switches and outlets tested serviceable.**

❍ *** SOME WIRING DEFECTS FOUND. FURTHER REVIEW AND REPAIRS BY A LICENSED ELECTRICAL CONTRACTOR IS WARRANTED. SEE COMMENTS BELOW.****

** Note- GFCI and Arc Fault protected circuits are tested only at the test / reset button location and only if the circuit is not being used by occupant. No other part of the circuit was tested for GFCI or Arch fault protection.

47 Wiring Defects

***Note:** I recommend that all electrical defects be reviewed and repaired completely by a licensed electrical contractor or an experienced, qualified professional.

***Note: Electrical contractor may discover additional electrical defects during repairs or review.**

A. ❑ Exposed electrical wiring or "Romex" found not installed to minimum standards subject to physical damage not in a conduit or raceway per standards: ②①
B. ❑ Exposed electrical splices / wires found not protected in a box with a cover: ②①
C. ❑ Damaged / Missing electrical cover plate at: ①
D. ❑ Three-prong electrical outlets did not test properly grounded: ②①
E. ❑ Miswired electrical outlet (Reverse polarity): ②①
F. ❑ Improper electrical wiring: ②①
G. ❑ Lens at light fixture is damaged or missing: ①
H. ● **Exterior electrical outlet found without a proper weather tight box or cover: ① @ South & west exterior See photo page**
I. ❑ Miswired electrical outlet (open neutral): ②①
J. ● **Electrical outlet found damaged: ②① @ south exterior See photo page**
K. ❑ GFCI outlet found improperly wired in series with another GFCI outlet (line / load reversal) protection non-operational: ②①
L. ❑ Light fixture is missing, exposed wiring: ②
M. ❑ Light fixture is loose / damaged / corroded: ②①
N. ❑ Recommend a proper bond jumper,(ground connection) across the water softener pipes due to the plastic valve per standards. ①②
O. ● **Extension cord improperly used as permanent electrical wiring: ②⑤ @ water heater See photo page**
P. ❑ Electrical outlet / switch found loose in wall: ②①
Q. ❑ I recommend that the entire electrical system be reviewed completely and corrected by a licensed electrical contractor or an experienced, qualified professional. Due to the excessive amount of discovered, undiscovered and /or suspected defects.①②⑤
R. ☒ Disclosure-Some electrical switches do not operate anything visible, (purpose unknown)②
S. ☒ Disclosure-Some lights found to be non-operational (check bulbs if still found non-operational contact a qualified electrical repair professional)③②
T. ❑ Some old / worn wall receptacles / outlets with loose connections found when tester was plugged in. Recommend replacement of the worn outlets. ①②
U.
V.
W.
X.

48 Wiring Comments

❑ Doorbell did not operate properly (Ding / Dong only) ③

● **DOORBELL OPERATED** ❑ Doorbell non-operational② ❑ Damaged doorbell button.④

☒ GFCI(s) outlet protection recommended for safety at all locations listed below **if** currently not installed:
exterior1968, bathrooms1975, garage1978, kitchen1987, basement1990, wet bar area1993, near laundry sink and sheds

● **CEILING FAN(S) OPERATED -** (Unable to determine how ceiling fans were installed at or to ceiling).③ ❑ Ceiling fan has exposed wiring ①
❑ Ceiling fan wobbles (balancing of the fan recommended) ⑤ ❑ Ceiling fan is non-operational. ②
❑ Ceiling fan hums (improper use of a dimmer type light switch for fan a speed switch) upgrades warranted for safety.⑤②

"G.F.C.I." Ground Fault Circuit Interrupter

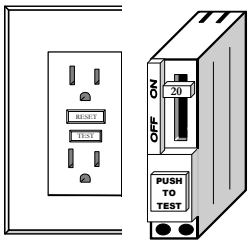

Outlet Type Circuit breaker type

WHAT IS A G.F.C.I.

A G.F.C.I. IS AN INEXPENSIVE, HYPERSENSITIVE SAFETY DEVICE WHICH, WHEN INSTALLED CORRECTLY, IS DESIGNED TO PREVENT A FATAL ELECTRIC SHOCK WHEN WATER, ELECTRICITY, AND HUMAN CONTACT ALL COMBINE AT ONCE -- *IF* THE CIRCUIT OR OUTLET IS PROPERLY G.F.C.I. PROTECTED.

TESTING YOUR G.F.C.I.

TO ENSURE PROPER OPERATION, EVERY G.F.C.I. SHOULD BE TESTED ONCE A MONTH. TO TEST THE G.F.C.I. SIMPLY PUSH THE TEST BUTTON AND LISTEN FOR THE RESET BUTTON TO POP OUT OR TRIP OFF. PUSHING THE RESET BUTTON SHOULD RESTORE THE POWER TO ALL EFFECTED OUTLETS.

KEY
① This is a potential hazard. Correction is needed.
② Recommend further review and repairs by a certified professional or licensed contractor.
③ Recommend servicing, repair and monitor as future issues may occur.
④ Maintenance needed. Contact a qualified professional.
⑤ Upgrades are recommended for safety.
⑥ Recommend further review by a qualified licensed engineer.
⑦ Refer to the current termite /pest inspection report.
⑧ Recommend monitoring. Future repairs may be warranted
⑨ Area not fully visible or accessible. Contact our office to re-inspect once access is made available.

49 Entry Door

● **WEATHER STRIPPING APPEARS SERVICEABLE** ● **HARDWARE APPEARS SERVICEABLE**
❑ Entry doorknob / deadbolt needs adjustment / repair.④⑤
● **OPERATED WHEN TESTED** ❑ Damaged door / jamb at entry door④③ ❑ Deteriorated finish on entry door④
❑ Damaged / Deteriorated / Missing weather stripping at FRONT entry door ③④
❑ Front entry door rubs& sticks. ④ ❑ Loose and/or Unsupported threshold found at the FRONT entry door. Repairs recommended. ③

50 Interior Doors

❑ Missing the metal strike plate at doorframe③:
● **OPERATED WHEN TESTED** ❑ Door found damaged ③: ● **Door is missing ③: @ bedroom # 1 & 2 closets**
❑ Door rubs& sticks: ③ ❑ Door knob is loose / missing / damaged: ③
❑ Door does not latch. Recommend adjustment of the strike plate ④:

51 Exterior Doors

❑ Loose, unsupported threshold found at the EXTERIOR door: Repairs recommended. ③
❑ Exterior sliding glass door does not operate well. Servicing or repair recommended.④③
● **OPERATED WHEN TESTED** ❑ Disclosure-Dual-pane glass fogged at exterior door.
● **TEMPERED GLASS** ❑ Disclosure- Glass does not appear tempered at exterior door. ⑤ ❑ Tempered glass not determined⑤
❑ Damaged / Missing screen door: EXTERIOR SLIDING GLASS DOOR ③ ❑ Screen door does not operate well-④:
● **LATCHING HARDWARE APPEARS SERVICEABLE** ❑ Exterior door Latching hardware is not operating properly: ④
● **TRACK OR THRESHOLD SERVICEABLE** ❑ Exterior door found difficult to operate. Adjustment / repair recommended④②:
❑ Evidence of past water intrusion around threshold area from exterior door with stains & damage at floor / wall.②⑦:
❑ Damaged / Missing weather stripping at exterior door: ④ ❑ Missing door stop at sliding glass door: ⑤

52 Windows

Type: ❍ ALUMINUM ● VINYL ❍ WOOD ❍ METAL - Single pane glass ● *Dual pane glass
Type: ● SLIDING ● SINGLE HUNG ❍ CASEMENT / CRANK ❍ LOUVERED
● **"SAMPLING" OF WINDOWS OPERATED WHEN TESTED** ❑ Moisture stains / damage at some window sills.②⑦
● ***Disclosure- Some dual-pane windows found "visibly" fogged.③ many places – 12 window pane found**
❑ Some windows do not properly open or lock for safety.①②
❑ Broken or disconnected sash cord at single or double hung window(s):②① ❑ Cracked or broken window glass found at②:
❑ Deteriorate window glazing putty at some wood windows. Maintenance recommended.④
❑ Disclosure - Missing or Damaged screens at some windows.④ ❑ Disclosure - Some windows found difficult to operate.④

53 Interior Walls

Type: ● **DRYWALL** ❍ PLASTER ❍ PANELING ❍ WALLPAPER ❍ WOOD
❑ Closets not visible due to occupants' belongings* ⑨
● **GENERAL CONDITION APPEARS SERVICEABLE*** ❑ Furnishings prevent full inspection⑨* (do a careful check prior to closing)
☒ Typical / common cracks.④③ ❑ Major cracks ②⑥ ❑ Minor / Moderate / Major wall repairs warranted③
❑ Evidence of past moisture stains & damage at wall areas.②⑦:

Notice: * The conditions inside walls, behind occupants stuff, behind wallpaper or paneling and areas not visible cannot be judged. Do a careful check during final walkthrough. Identification, investigation or recommendations regarding the presence of MOLD are outside the scope of this inspection.②

54 Ceilings

Type: ● **DRYWALL** ❍ ACOUSTIC SPRAY * ❍ CEILING TILES ❍ PLASTER ❍ WOOD
Notice: *Determining if acoustic spray in ceilings contains asbestos is beyond the scope of this inspection.
● **GENERAL CONDITION APPEARS SERVICEABLE** ☒ Typical / common cracks.④③
❑ Evidence of past moisture stains & damage at ceiling areas.②⑦:

55 Floors

Type: ● **CARPET** ● **TILE** ❍ VINYL / LINOLEUM ❍ WOOD ❍ LAMINATE
❑ Uneven or Sloping noted at areas of the interior floor.② ❑ Loose carpet ④
● **APPEARS SERVICEABLE** ● **Disclosure - Some visible deterioration and/or damaged of the flooring noted at areas throughout ③**
❑ Furnishings & occupants belongings prevent full inspection.⑨ (Do a careful check prior to closing)
❑ Disclosure - Some cracked floor tiles noted in areas within the house. ③ ❑ Disclosure - Floor squeaks noted in areas.③

Interior notes: Workmanship, aesthetics, cosmetic defects and conditions, pet stains or odors, environmental or toxic conditions and/or rodents, etc… (see contract) are not part of this inspection. Client must perform a visual cosmetic inspection of the entire interior and exterior to satisfy him/herself of the condition of this building. If client has questions regarding what a cosmetic defect is, contact the inspector.

KEY
① This is a potential hazard. Correction is needed.
② Recommend further review and repairs by a certified professional or licensed contractor.
③ Recommend servicing, repair and monitor as future issues may occur.
④ Maintenance needed. Contact a qualified professional.
⑤ Upgrades are recommended for safety.
⑥ Recommend further review by a qualified licensed engineer.
⑦ Refer to the current termite /pest inspection report.
⑧ Recommend monitoring. Future repairs may be warranted
⑨ Area not fully visible or accessible. Contact our office to re-inspect once access is made available.

56 Fireplace(s) N/A

Location: **A: NO FIREPLACE INSTALLED IN THIS HOME**

Type: MASONRY FREESTANDING PREFABRICATED - WOOD BURNING WITH GAS GAS **ONLY** - WITH INSERT.*

❑ **APPEARS OPERATIONAL** ❑ Fireplace found unsafe -(Do not Use until serviceable condition is verified) See notes below ②①
❑ Cracked refractory shields found in the fireplace (monitor)③ ❑ Damaged refractory shields in the fireplace (repair warranted)②①

❑ **GAS OPERATED SAFELY** ❑ Damaged / Deteriorated log lighter / log grate found oversized in the fireplace.①⑤
❑ Gas found capped in fireplace (no test)③ ❑ Improper flex gas line / valve in fireplace.①
❑ **DAMPER OPERATIONAL** ❑ Fireplace damper found non-operational.②

❑ A proper lock needed on the fireplace damper when a gas log appliance is installed in this wood-burning fireplace per standards.⑤
❑ Disclosure- Damper is properly locked open with gas log.- ☺ ❑ Damper missing handle ④
❑ Freestanding fireplace is too close / Improper clearances to combustibles or wall per manufacturer's requirements. ①②
❑ Recommend sealing the opening around the gas pipe through the sidewall inside the fireplace.④⑤
❑ Cracked/ damaged bricks / Deteriorated mortar in the fireplace firebox - (repair / maintenance recommended)②④

N/A- **FAN / BLOWER IS OPERATIONAL** ❑ Fan / blower found non-operational at fireplace.②
❑ Damaged / Deteriorated door(s) at fireplace front ③④ ❑ Damaged / Deteriorated screen at face of fireplace ③④
❑ Evidence of water intrusion with stains and rust deterioration at flue pipe and fireplace firebox connection.③②
❑ Disclosure- Firebox was not fully visible due to ashes or artificial log appliance③
❑ Evidence of minor & moderate malfunction of the draft of the fireplace (back-venting smoke from the fireplace into the house)①②
Notice: *The proper installation of an insert can't be determined without removing the unit which is beyond the scope of this home inspection.②

57 Chimney N/A

Chimney Type: MASONRY - CLAY LINED OR PUMAS LINED CONCRETE METAL FLUE

❑ **VISIBLE AREAS OF THE CHIMNEY APPEAR SERVICEABLE** - Notice: The interior of the flue liner is not visible and is not inspected.
❑ **CHIMNEY CAP & SPARK SCREEN PRESENT AND SERVICEABLE**
❑ Spark screen / Rain cap is recommended top of the chimney as a safety upgrade.⑤ ❑ found damaged. Replacement warranted.②
❑ Recommend cleaning & sweeping the fireplace and chimney by a qualified chimney sweep. ④
❑ Recommend further review and recommendations of the fireplace & chimney by a qualified chimney sweep / contractor.②①
❑ The metal chimney chase cap appears to be ponding water and can deteriorate. Upgrades recommended.③
❑ Cracked /separated mortar and loose bricks & at chimney exterior near top. This may be indicative of the damaged flue liner inside the chimney. Do not use fireplace as a damage flue is considered a fire hazard.② ❑ Unlined chimney. Potential fire hazard.②①
❑ The chimney terminates too low above the roof per standards. (Does not meet the minimum 3 – 2 – 10 rule). This can negatively affect the

58 Smoke Detectors

☒ *Recommend changing batteries in all smoke detectors as part of annual maintenance.* ⑤④
☒ **TEST DETECTORS WEEKLY FOR SAFETY.** ④⑤ ☒ Fire & security alarm systems not inspected ②

● **SMOKE & C O DETECTORS SOUNDED WHEN BUTTON WAS PUSHED OR INDICATOR LIGHT ON.**
❑ ***Carbon monoxide / smoke detector did not respond when tested*** @ ①:
● ***Hard wired smoke detector missing at required location*** @ ①:bottom of stairs See photo page
● ***Carbon monoxide detector missing at required location*** @ ①: downstairs
Pre-1988 a single smoke detector is required in the hall outside each bedroom. **Post 1988**-Requires detectors also in each bedroom. NFPA-77

59 Interior Features N/A

❑ **CENTRAL VACUUM OPERATED WHEN TESTED** ❑ Central vacuum non-operational ③ ❑ Central vacuum not tested
❑ Recommend servicing the central vacuum system as part of typical maintenance ④
☒ Security systems, fire sprinklers, fire alarms, and intercom systems are outside the scope and not part of this inspection. ②④
❑ Missing the required FIRE SPRINKLER service box containing the extra fire sprinkler heads and wrench generally located in garage. ②
❑ **WET BAR FAUCET, COUNTER, AND PLUMBING UNDER SINK SERVICEABLE** ❑ Leaks at drain / faucet ② ❑ Improper drain piping②
❑ Damaged / Deteriorated counter / cabinet③ ❑ Moisture stains / Damage below sink ③ ❑ Disclosure-Cold water only

60 Interior Stairs

❑ Loose balusters/ spindles at interior stairway railing ③⑤
❑ Banister / guard railing found loose at loft / upper level. ①②
● **INTERIOR STAIRS APPEAR SERVICEABLE** ❑ Uneven tread rise found at interior stairs. Potential trip hazard. ①②
❑ Disclosure- Interior stairway is a little too narrow and does not meet current standards. ⑤ ❑ Disclosure- Low ceiling at stairway.⑤

● **STAIR HANDRAILS APPEAR SERVICEABLE** ❑ Interior stairway handrail/ railing is loose / missing. Repairs warranted for safety.①
❑ Recommend adding handrails at steps with less than 4 risers as safety upgrade.⑤
❑ Openings through railings at interior stairway and/or banister(s) do not meet current standards (Upgrades recommended for safety).①
❑ Recommend returns at handrails for safety. (Turning ends or handrail into wall to help prevent catching coat or bag on raining).⑤

KEY
① This is a potential hazard. Correction is needed.
② Recommend further review and repairs by a certified professional or licensed contractor.
③ Recommend servicing, repair and monitor as future issues may occur.
④ Maintenance needed. Contact a qualified professional.
⑤ Upgrades are recommended for safety.
⑥ Recommend further review by a qualified licensed engineer.
⑦ Refer to the current termite /pest inspection report.
⑧ Recommend monitoring. Future repairs may be warranted
⑨ Area not fully visible or accessible. Contact our office to re-inspect once access is made available.

Type: ● **GARAGE - ATTACHED** ❑ **CARPORT** - ❍ **DETACHED** ❍ **GARAGE CONVERSION**②-(Check with building department for permits)

61 Floor

❑ **FLOOR NOT FULLY VISIBLE DUE TO OCCUPANTS BELONGINGS.*** ⑨
❑ Evidence of past moisture or water intrusion into garage from .②⑦③

● **APPEARS SERVICEABLE** ● Common cracks.⑧
❑ Moderate / Major cracks and separations found in the garage floor. Floor found raised and/or settled. ③
Notice: * The conditions inside walls, behind occupants stuff, and areas not visible, cannot be judged. Do a careful check during final walkthrough .

62 Ceilings / Walls

❑ **WALLS NOT FULLY VISIBLE DUE TO OCCUPANTS BELONGINGS.*** ⑨
❑ Sagging noted over garage door at header②⑥

● **APPEARS SERVICEABLE** ❑ Moisture stains / damage on garage walls / ceiling. ②⑦
❑ Holes in / Damaged / Missing areas of the garage firewall. ①--(Repairs / upgrades recommended for fire safety)
❑ Wall / Ceiling attic access ladder in garage does not meet minimum fire safety standards--(Repairs recommended for fire safety) ①⑤
Notice: * The conditions inside walls, behind occupants stuff, and areas not visible, cannot be judged. Do a careful check during final walkthrough .③

63 Ventilation

❑ Cracked / broken garage window ③⑤
❑ Damaged exterior wall vent screen(s) in garage ③⑤

● **APPEARS SERVICEABLE** ❑ Disclosure- Missing / Damaged screen(s) at garage window ③

64 Door to Living Space

❑ Damaged door / jamb / threshold at the garage fire door to the living space.②

● **APPEARS TO BE A PROPERLY INSTALLED FIRE DOOR** ❑ A Pet door improperly installed in the garage fire door to the living space.①⑤
❑ Self closer is non-operational / missing at garage fire door to the living space. ①
❑ Self closer did not fully close door and latch door properly at garage fire door to the living space. ①
❑ Damaged / Deteriorated / Missing weather stripping at garage fire door to the living space.①②
❑ Door from garage into the house or living space found to NOT fire rated per standard. ①(Upgrades recommended for fire safety)

65 Exterior Door N/A

❑ Deteriorated finish at the garage man door.④ ❑ Deadbolt Lock not-operational③
❑ Exterior garage pedestrian door rubs and sticks. Maintenance is recommended.④

❑ **OPERATED WHEN TESTED** ❑ Unable to test / view the garage pedestrian door due to occupants belongings / locked③
❑ Moisture type damaged found at the garage pedestrian door, jamb & trim. ③⑦

66 Vehicle Door

Type / Qty.: ● **ROLL-UP:** 1 ❍ TILT-UP: ❍ SLIDING: ❍ SWINGING:
☒ Lubricate the hinges, rollers and auto opener annually as part of typical maintenance.

● **OPERATED WHEN TESTED** ❑ Moisture stains & damage at garage vehicle door. ③⑦
❑ Garage vehicle door needs adjustment and/or balancing for safety.④⑤ ❑ Garage vehicle door does not fully open.③④
❑ Cracked / Damaged / Dented panel(s) at garage vehicle roll-up door.②⑤
❑ Tension rod loose / missing at garage vehicle door. ①② ❑ Deteriorated / Damaged spring at garage vehicle door ②①
● **SAFETY SPRINGS INSTALLED** ❑ No safety-type springs found at the garage vehicle door. Upgrades recommended for safety. ⑤
❑ Hinge(s) found deteriorated / damaged at the garage vehicle door. Recommend replacement. ①②
❑ Garage vehicle door is locked, blocked, not tested & not inspected. ②⑨
❑ Recommend lubrication of the garage vehicle door as part of annual maintenance. Door squeaks when operated.④
❑ Damaged / disconnected rollers or track at the garage vehicle door ②

67 Automatic Opener

Number of units: 1

● **OPERATED PROPERLY TODAY** ❑ Garage Auto opener needs adjustment / lubrication③ ❑ Unit / track unsecured / loose.②③
● **AUTOMATIC REVERSE OPERATED WHEN TESTED**
❑ Disclosure -Auto opener is old and does not have the newer electric eye safety reverse feature .Upgrade recommended ⑤
❑ The garage vehicle door auto opener safety reverse did not operate properly. Adjustment- Repair warranted.①②
❑ Auto reverse electric eye sensors should be installed no higher than six inches from floor per standards.⑤

68 Electrical

● **NO VISIBLE DEFECTS NOTED TODAY** - However all the electrical is not fully visible.
❑ Defects found in the garage electrical /further review and repairs and/or upgrades warranted. See Electrical Page13 for details. ②

COMMENTS:

KEY
① This is a potential hazard. Correction is needed.
② Recommend further review and repairs by a certified professional or licensed contractor.
③ Recommend servicing, repair and monitor as future issues may occur.
④ Maintenance needed. Contact a qualified professional.
⑤ Upgrades are recommended for safety.
⑥ Recommend further review by a qualified licensed engineer.
⑦ Refer to the current termite /pest inspection report.
⑧ Recommend monitoring. Future repairs may be warranted
⑨ Area not fully visible or accessible. Contact our office to re-inspect once access is made available.

69 Kitchen Sink

❑ Dishes block full view of sinks -could not fully inspect ③
❑ Hot & cold reversed at the kitchen sink faucet.④

● **KITCHEN SINK APPEARS SERVICEABLE** - Typical wear for age. ❑ Heavy wear / chipped.③ ❑ Slow draining at kitchen sink.④③
❑ Recommend sealing the kitchen sink at counter connection④
● **FAUCET OPERATED WHEN TESTED** ❑ Kitchen faucet leaks / drips at faucet neck when on and is corroded.②
❑ Kitchen sink spray wand leaks / damaged / did not shut off sink spout④
● **PLUMBING UNDER SINK SERVICEABLE** ❑ Kitchen sink drain pipes actively leak water and are corroded.②
❑ Moisture stains / damage below kitchen sink①②⑦ ❑ Improper waste piping under kitchen sink.②
❑ Restricted view below kitchen sink-(all areas not visible)③⑦
❑ Possible mold or mildew like growth visible below the kitchen sink. Recommend review /cleanup by an appropriate professional.②①

70 Kitchen (general)

❑ Cracked kitchen ceiling light panel(s)③

● **COUNTER AND CABINETS APPEAR SERVICEABLE** ❑ Possible bad light fixture or bad bulbs at kitchen ceiling light ③④
● Kitchen counters & cabinets have some wear and deterioration.③④
❑ Kitchen counters, cabinets not fully visible due to occupant's belongings. (do a careful check during final walkthrough)③

71 Disposal

❑ Dishes block sink and disposal, could not fully inspect③

● **DISPOSAL OPERATED** ❑ Kitchen sink disposal is non-operational.② ❑ Kitchen sink disposal is worn & corroded.③
❑ Missing a proper electrical wire-bushing clamp at bottom of kitchen sink disposal (hazard)②
❑ Damaged / deteriorated rubber splashguard at kitchen sink disposal. Recommend replacement for safety. ①

72 Kitchen Notes

_____

73 Oven / Cooktop

Type: ❍ **ELECTRIC: oven & cook top** ● **GAS : cook top & oven**
 # OF OVENS: . ●

● **COOK TOP OPERATED WHEN TESTED** ❑ Cook top and/or oven not tested (Gas not on for today's inspection)③
❑ Damaged / Deteriorated knobs at cook top / oven.②⑤ ❑ Disclosure -Cook top & oven found is worn ③④
❑ Cook top burner did not operate or ignite properly when tested. Recommend cleaning / servicing④

● **OVEN OPERATED** ● **OVEN DOOR SERVICEABLE** ● **OVEN DOOR GASKET SERVICEABLE** ❑ Oven light non-operational③
❑ Oven / broiler element / burner non-operational④ ❑ Damaged /deteriorated oven door gasket④ ❑ Cracked glass①
☒ Disclosure - Clock, timers, rotisseries, thermostat accuracy, self-cleaning systems and convection not tested⑧

● **COOK TOP EXHAUST HOOD / FAN OPERATIONAL** ❑ Kitchen cook top exhaust hood filter is dirty ④⑤ / missing ③ light / fan non-operational④
❑ Disclosure- No hood required or installed above the kitchen cook top- No flammable cabinetry within 30 inches above the cook top surface.)
❑ Improper installation of a non-fire rated / Loose / Disconnected cook top exhaust vent pipe found passing through kitchen cabinet above the cook top. This can be considered a potential safety hazard. Correction is needed. ②

74 Dishwasher

❑ Non-built in dishwashers are not part of this inspection ③
❑ Dishwasher door springs damaged or loose, door opens unsafely ①

● **OPERATED WHEN TESTED** - However Unable to determine active leaking in areas not visible.⑧ ❑ Dishwasher found non-operational ②
● **DOOR, SEALS AND RACKS APPEAR SERVICEABLE** ❑ Disclosure-Some rusting and deterioration of the metal racks in dishwasher. ③
● **DRAIN LINE SERVICEABLE** ❑ High loop method provided for drain system⑤
❑ Improper installation of dishwasher waste piping. No air gap device provided at dishwasher drain per standard. [UPC 807.4]. ①⑤
● **AIR GAP METHOD PROVIDED** ❑ Soap dish in dishwasher found non-operational③④
❑ Leaking found at the dishwasher air gap device. Cleaning or servicing is warranted ③④
❑ Dishwasher is not properly mounted into / at the cabinet and falls when door and racks are open.⑤③

75 Special Features

❑ **INSTANT HOT WATER MAKER SERVICEABLE** ❑ Instant hot water maker non-operational.④②
❑ **TRASH COMPACTOR OPERATED** ❑ Compactor non-operational / damaged. Recommend servicing ④②
● **MICROWAVE OPERATED** ❑ Microwave found non-operational / damaged. Recommend servicing ④②
● **WATER PURIFIER / FILTER INSTALLED -** Water quality and condition of filters and tank not tested)③
❑ Recommend servicing the water filter system. ☒ A water filter system should have its filters changed at least every 2+/-years. ④

KEY
① This is a potential hazard. Correction is needed.
② Recommend further review and repairs by a certified professional or licensed contractor.
③ Recommend servicing, repair and monitor as future issues may occur.
④ Maintenance needed. Contact a qualified professional.
⑤ Upgrades are recommended for safety.
⑥ Recommend further review by a qualified licensed engineer.
⑦ Refer to the current termite /pest inspection report.
⑧ Recommend monitoring. Future repairs may be warranted
⑨ Area not fully visible or accessible. Contact our office to re-inspect once access is made available.

Location: A: HALLWAY B: MASTER BEDROOM C: DOWNSTAIRS D:_____
E:_____ F:_____ G:_____

76 Toilets

1.6 LOW FLOW TOILET INSTALLED: ------A● B● C● D❑ E❑ F❑ G❑

TOILET OPERATED ---------- -A● B● C● D❑ E❑ F❑ G❑

❑ Toilet loose at floor, recommend new wax seal ②⑦:
❑ Recommend caulking at base of toilet where not installed. ④
❑ Corroded leaking supply line at toilet ②:
❑ Loose / leaking toilet tank④③:
❑ Toilet does not flush / water found off. Have reason verified by plumber ②:
❑ Water runs continuously / sporadically in toilet tank④:
❑ Cracked toilet tank cover / base / bowl in the ②:
❑ Moisture stains / damage around toilet②⑦:
❑ Toilet does not flush properly (must hold handle down to flush)④:

77 Sinks

SINK FAUCET & DRAIN OPERATED ---------- A● B● C● D❑ E❑ F❑ G❑

BATHROOM SINK AERATOR / 2.0 GPM LOW FLOW- --------- A● B● C● D❑ E❑ F❑ G❑

❑ Hot & cold reversed at the bathroom sink faucet①②:
❑ Sink found cracked / damaged / deteriorated③(no leaks):
❑ Corrosion / damage underside of the bathroom sink③:

❑ Sink / counter found loose at wall connection: ①② faucet found corroded / deteriorated or damaged②:
● **Sink faucet handle found loose at counter ②: @ master bathroom right sink**
❑ Leaking Hot / Cold supply line below bathroom sink ②:
❑ Low water volume from sink faucet④:
❑ Disclosure -Corrosion on supply lines below sink.⑧ :

❑ Sink drain stopper missing or non-operational ④:
● **Slow draining at bathroom sink.②④: @ Hall bathroom**
❑ Improper drain piping under bathroom sink in②:
❑ Active leaking from sink drain line ②:
❑ Rusted / Corroded drain pipe③:

Restricted view in cabinets and counter tops due to occupants belongings ⑨: --A❑ B❑ C❑ D❑ E❑ F❑ G❑
❑ Damage / deterioration to cabinets③:
❑ Grout / caulking recommend at counter③:
❑ Moisture stains / damage below sink②①:
❑ Damage / deterioration to counter③:

78 Ventilation

VENTILATION APPEARS PROPER ----------A● B● C● D❑ E❑ F❑ G❑

❑ No / Inadequate bathroom ventilation ⑤:
❑ The bathroom exhaust fan did not operate / makes unusual noise ②:
❑ The bathroom exhaust fan vents improperly terminates into attic space ③:
❑ The bathroom window is cracked / broken / non-operational③:
❑ A bathroom exhaust fan recommended for better ventilation in the⑤:
❑ Bathroom heater is found non-operational ②:

KEY
① This is a potential hazard. Correction is needed.
② Recommend further review and repairs by a certified professional or licensed contractor.
③ Recommend servicing, repair and monitor as future issues may occur.
④ Maintenance needed. Contact a qualified professional.
⑤ Upgrades are recommended for safety.
⑥ Recommend further review by a qualified licensed engineer.
⑦ Refer to the current termite /pest inspection report.
⑧ Recommend monitoring. Future repairs may be warranted
⑨ Area not fully visible or accessible. Contact our office to re-inspect once access is made available.

Location: A: HALLWAY **B:** MASTER BEDROOM **C:** DOWNSTAIRS **D:**_____
E:_____ **F:**_____ **G:**_____

79 Bathtubs ☐

TUB FAUCET & DRAIN OPERATED ----------A● B● C N/A D❑ E❑ F❑ G❑

N/A- means not installed in this bathroom

❑ Whirlpool tub operated when tested and tub GFCI tested ok:
❑ Whirlpool tub GFCI reset location:
❑ Whirlpool tub – jets non-operational②:
❑ Disclosure -Sauna / steamer not inspected ②:

❑ Moisture stains and damage to wall & floor outside tub ②⑦:
❑ Damage / deterioration to tub②:
❑ A small repairable chip found in the fiberglass tub. ③
❑ Caulking recommended at tub to floor & wall outside the enclosure④③:

❑ Tub faucet leaks / drips from spout continuously / handle(s) when on②:
❑ Hot & cold reversed at the tub faucet①②:
❑ Tub faucet found loose /corroded / damaged④③:

❑ Slow draining at tub②④:
❑ Drain stopper missing / non-operational at tub drain④:
❑ Tub / enclosure found chipped / damaged③:
❑ Tub spout found loose / not sealed well at shower wall connection②:
❑ Loose grab bar in the bathtub/ shower enclosure⑤

80 Showers ☐

N/A- means not installed in this bathroom

*__SHOWER FAUCET & DRAIN OPERATED__ --------A● B● C N/A D❑ E❑ F❑ G❑

2.0 LOW FLOW SHOWERHEAD INSTALLED: -----A● B● C N/A D❑ E❑ F❑ G❑

❑ Deteriorated grout and/or caulking, maintenance is recommended at shower area ①③:
❑ Improper installation of the wall tile in the BATHROOM shower enclosure. The wall tile appears to be glued directly onto the drywall. This can lead to a future excessive moisture condition in the wall behind the tile and/or loose wall tiles. ②
❑ Moisture stains & damage to walls outside shower②⑦:
❑ Damaged fiberglass shower enclosure ③:
❑ A small repairable chip found in the fiberglass shower enclosure. ③
☒ *Determining the conditions of shower pans is outside the scope of this inspection. (Recommend testing by a qualified plumber ②)

❑ Slow draining at shower. Reason unknown ②④:
❑ Low water volume from showerhead in ②:
❑ Hot & cold reversed at the shower faucet ①:
❑ Showerhead leaks & drips at pipe connection in ④③:
❑ Showerhead missing in ③:
❑ Shower faucet leaks from handle(s) when on and is corroded and considered damaged.②:

❑ Glass shower door leaks / does not seal or latch well ③:
❑ Shower door found difficult to operate; adjustment or repair warranted③⑤:
❑ Glass shower door found broken / cracked / not tempered glass ①:
❑ Missing a proper swing guard at shower sliding glass enclosure doors per requirements①:

❑ Shower diverter leaks from the tub spout when shower is on (a little) ④:
❑ Shower diverter non-operational at tub spout ②:
❑ Shower diverter corroded & difficult to operate at tub spout ④③:

NOTE: Determining the condition of walls behind tile and / or determining if the tile was installed per standards is outside the scope of this inspection. ⑧