Operating Rules (Required Civil Code Sec. 4525)
Bixby Village Community Association

Order: 6ZRKXQLHX
Address: 600 Wakefield Ct Unit 102
Order Date: 06-15-2020
Document not for resale
HomeWiseDocs

Bixby Village Community Association
Rules & Regulations

Adopted by the Board of Directors
Revised February 10, 2016

Order: 6ZRKXQLHX
Address: 600 Wakefield Ct Unit 102
Order Date: 06-15-2020
Document not for resale
HomeWiseDocs

BIXBY VILLAGE COMMUNITY ASSOCIATION
RULES AND REGULATIONS

1.0 GENERAL

In accordance with Bixby Village Community Association CC&Rs, the Board of Directors is authorized to establish Rules and Regulations governing the use and occupancy of the units and the common areas.

These Rules and Regulations are adopted pursuant to Article XI, Section 11.5 and Article III, Section 3.8 of the By-Laws of the Association. The Rules and Regulations of the Bixby Village Community Association shall be enforced by the Board of Directors. Reported and observed violations of the Rules may initiate violation correspondence to be mailed and, if the violation continues, may result in a Special Hearing before the Board of Directors. Should a Special Hearing become necessary, and the offenses are deemed valid, the Board may levy a penalty fee against one's homeowner account and may suspend one's Member privileges. Parking violations may result in towing without a Special Hearing.

2.0 PRIVATE STREETS

All streets contained within the boundaries of the Bixby Village planned development are private except for public access over the public and private easements over North/South Greenway, Avenida de Castillo and Sixth Street. These easements are for through travel only and Bixby Village Parking Rules will remain in effect for residents and the LBPD will enforce traffic regulations on these three (3) streets. The private streets are subject to the recorded Declaration of Covenants, Conditions and Restrictions for Bixby Village ("Declaration"), the California Vehicle Code as incorporated in Article XI, Section 11.13 of the declaration as well as the Association Rules.

3.0 PARKING AND TRAFFIC RULES

3.1 Parking and traffic within the private streets and common areas of Bixby Village are governed by the Long Beach Fire Department Code and the California Vehicle Code and the rules contained in sections 3, 4, 5, and 6 hereof.

3.2 Parking is prohibited:

- 3.2.1 In front of mailboxes.
- 3.2.2 Within 15 feet of a fire hydrant.
- 3.2.3 On or over any sidewalk or grass area.
- 3.2.4 At red painted curbs.
- 3.2.5 More than 18 inches from the curb.
- 3.2.6 In opposite direction of traffic on North and South Greenway, 6th Street, Avenida de Castillo, and Shea.
- 3.2.7 In any crosswalk or blocking residential access sidewalk.
- 3.2.8 In any location for more than 96 hours without prior approval.
- 3.2.9 On concrete aprons in front of garage in accordance with Fire Department Code
- 3.2.10 In any location that violates the mandatory 20 foot Fire Department access lane

3.3 Right hand curbside street parking is allowed subject to Rule 3.2.1 through Rule 3.2.10.

3.4 The speed limit in Bixby Village is 25 MPH. All traffic in Bixby Village must comply with the speed limit and all stop signs.

3.5 Resident's recreational vehicles (RV's), trailers, motor homes, boats, boat trailers, campers, limos, or commercial trucks or similar vehicles may be parked only for twenty-four hours for loading or unloading purposes. The vehicle should be Safelisted (see 4.1.3) if it is to be parked overnight in Bixby Village. Storage of these vehicles on streets or in garages is not allowed. **Non-resident recreational vehicles are not allowed to park in Bixby Village and are subject to immediate tow**.

3.6 Commercial vehicle is defined as one whose primary or typical purpose is the transport of products, people, trash or equipment in pursuit of commerce for a profit. A conspicuous sign,

Order: 62RKXQLHX
Address: 600 Wakefield Ct Unit 102
Order Date: 06-15-2020
Document not for resale
HomeWiseDocs

commercial license or other advertisement on the vehicle is considered prima-facie evidence of its commercial purpose. The Board may, in accordance with the Association's By-laws, use its discretion to make specific exceptions to the commercial vehicle restrictions.

3.7 Except as provided for in Section 3.5, oversized vehicle is defined as any vehicle over 18 feet in length or over 80 inches in height. Oversized vehicles may not be safelisted or parked overnight and are subject to immediate tow. Variances may be granted at the sole discretion of the Board on a case by case basis only. Precedence does not apply at any time in such cases.

3.8 The Board of Directors has the authority to establish a Parking Committee and contract with a licensed security and patrol company to assist the Board in maintaining compliance with these Rules. The Board of Directors and/or the Parking committee and/or a contracted patrol company shall have the authority to:

- 3.8.1 Regularly patrol Bixby Village.
- 3.8.2 Respond to questions and complaints from Bixby Village residents about parking violations.
- 3.8.3 Place a 'WARNING/CITATION NOTICE" on vehicle(s) in violation of these rules, indicating the violation.
- 3.8.4 Maintain records of warning/citation notices and authorized resident safelisting.
- 3.8.5 Give the Board of Directors notice of repeat offenders.
- 3.8.6 Authorize and order towing in accordance with Rules and Regulations.

3.9 Owners will be subject to a special assessment for the cost of cleanup and/or repair of any damage caused by fluid leaks from their vehicle(s) or their guest’s vehicles.

3.10 Controlled Parking will be limited to:

- 3.10.1 registered resident and caregiver vehicles with a valid hangtag,
- 3.10.2 safelisted guest vehicles, and
- 3.10.3 safelisted resident vehicles without a hangtag

3.11 All common area parking spaces have been designated as permit parking only and violators will be cited during the citation period (12:01 AM – 06:00 AM). Vehicles that are not registered to a resident of BVCA, but are driven from one's place of business, must comply with all other BVCA parking restrictions.

4.0 IDENTIFICATION OF RESIDENT AND GUEST VEHICLE(S)

Bixby Village is a private community and all outside parking is designated as controlled parking. Parking is limited to garages, marked outside parking, and long driveways (if they can legally be used for parking). All street parking is under the control of the Board of Directors. All homes have 2 car garages as the primary parking area. Only non-garaged resident vehicles are required to be registered with the Security firm. New residents with more than two (2) vehicles must apply for a hangtag within 14 days of occupancy.

4.1 The maximum number of vehicles allowed per residence is 4 with at least 3 licensed drivers showing proof of residency. 3 registered vehicles will require at least 2 licensed drivers showing proof of residency. Residents with more than 2 vehicles must park 2 in the garage before a free hangtag for outside parking will be issued for additional vehicles. The maximum number of hangtags per household is 2. Vehicles that are not able to physically fit in the garage due to their dimensions will be reviewed by BVCA HOA Management for compliance and eligibility for a hangtag.

4.2 All residents are required to Safelist their guest's vehicle with the security company if the vehicle is parked in the controlled area from 12:01 AM – 06:00 AM. The purpose of Safelisting is to identify vehicles that are authorized temporary parking allowed in Bixby Village. Safelisting criteria and instructions are available on the BVCA website.

4.3 Guest is defined to be a person in one's home or to whom the hospitality of the home has been extended for a brief period. It is not intended to include persons whose objective is to find a convenient parking spot while they are on vacation or attending activities away from Bixby Village.

4.4 Each unit will be supplied the necessary information to Safelist guest's vehicle(s).

Order: 6ZRKXQLHX
Address: 600 Wakefield Ct Unit 102
Order Date: 06-15-2020
Document not for resale
HomeWiseDocs

4.5 Guests must comply with all parking rules and regulations applicable to residents. Residents are responsible for their guests who park in violation of the rules and for any damages to property caused by their guests' vehicle(s).

4.6 Safelisting privileges may be suspended by the Board of Directors during any time in which any assessment remains unpaid and delinquent, or for a period not to exceed thirty (30) days for any single infraction of the Association's rules and regulations, provided that any suspension shall be made only after notice and an opportunity for a hearing.

4.7 CSULB vehicles parked on BVCA property during the day with a CSULB decal will be cited and on the 2nd occurrence towed. If the vehicle belongs to a valid resident they should contact BVCA HOA Management and the HOA Security Firm to validate residency prior to the 2nd citation.

5.0 USE OF GARAGES

Each unit in Bixby Village has a two-car garage. The primary function of the garage is to provide parking space for two licensed, operable vehicles. Garages should be used to their "maximum design capacity" before a free hangtag will be issued. Garages may not be used for commercial ventures or living space.

5.1 Residents owning only one or two vehicles must park all automobiles (definition includes SUVs and small trucks or pickup trucks) in the garage. The storage of inoperable or unregistered/unlicensed vehicles or any other activity to the exclusion of a licensed, operable automobile in regular use is prohibited.

5.2 Garage doors must be closed and drawn to the ground except when in use or for a temporary purpose.

5.3 Parking two vehicles in the garage is a policy that applies to every resident regardless of reason. The reason for not complying with parking two in the garage does not matter; the resident can either park two in the garage or pay a monthly fee or the vehicle will be towed. Modifications of a garage which preclude normal parking are not grounds for an outside parking permit. Landlords shall share this enforcement plan with their renters. Units with long driveways must abide by the two vehicles in the garage rule. Vehicles parked outside must either be safelisted or have a hangtag.

5.4 Residents that register three vehicles and park two in the garage will be issued a hang tag that will identify one vehicle as permitted to park outside in an approved parking space.

5.5 Residents that register four vehicles and park two in the garage will be issued two hang tags that will identify two vehicles as permitted to park outside in an approved parking space.

5.6 The homeowner can either park two in the garage or sign an agreement to pay a fee for each non-complying vehicle in return for a hang tag which will allow that vehicle to be parked outside in an approved parking space.

5.7 The replacement cost for a lost hangtag is payable by the resident.

5.8 Residents may contact the Management Company to request a variance from the Board. The Board may, in accordance with the Association's By-laws, use its discretion to make specific exceptions to the vehicle restrictions.

6.0 VEHICLE IMPOUNDS AND ASSESSMENT OF FEES

6.1 Violation of the Parking Rules may result in a vehicle tow and impound. All towing and impound costs are at the owner's or guest's expense.

6.2 A vehicle will not be towed without specific authorization by the Parking Patrol Supervisor once all required criteria to authorize the tow have been met.

6.3 Vehicle(s) not Safelisted with Security Company or displaying a current BV hangtag will be considered non-resident vehicle(s). Non-resident vehicles will be cited once and are subject to immediate tow upon the second violation in a 30 day period, Nonresident recreational vehicles are subject to immediate tow (see Rule 3.5).

6.4 Vehicles in violation of Rules 3.2.1 through 3.2.4 and 3.2.7 through 3.2.10 are subject to immediate tow.

6.5 A vehicle with a current Bixby Village hangtag or Safelisted may be towed without attempt of prior notice/warning in the following cases:

Order: 6ZRKXQLHX
Address: 600 Wakefield Ct Unit 102
Order Date: 06-15-2020
Document not for resale
HomeWiseDocs

6.5.1 A vehicle parked in violation of the Fire Department Parking Codes (see 3.2.2, 3.2.9, and 3.2.10).

6.5.2 A vehicle blocking construction crews from scheduled work when the homeowner has been previously notified.

6.6 The Board reserves the right to fine and/or tow with respect to all other vehicle violations.

7.0 SOLICITATION AND SALES

7.1 Solicitation for any reason including but not limited to items for sale, donations or recruitment is prohibited in Bixby Village except as approved by the Board of Directors.

7.2 Advertising literature shall not be posted on garages, mailboxes, doors, or any other common area of Bixby Village except as approved by the Board of Directors.

7.3 **Sales open to the public such as garage, lawn, patio, and estate sales** are not permitted anywhere in Bixby Village. By appointment only estate sales may be held with the written permission of the Board.

8.0 SIGN RULES

8.1 Only one sign is permitted in the common area to advertise a unit for sale or lease. The sign must be located abutting only the unit advertised and shall not be attached to the structure of any common area.

8.2 A maximum of two signs that advertise an open house may be located on the Bixby Village common area. These signs may be displayed only during the time that the unit is being shown and must not exceed six (6) hours.

8.3 Real estate signs placed in accordance with Sections 7.1 and 7.2 above shall be the usual and customary sign used by real estate brokerage houses or professionally prepared customary signs of reasonable dimension on weather resistant material which states the Residence is for sale, or lease so long as it is consistent with the standards promulgated by the Board of Directors. Brochure boxes attached to the sign post are permitted.

8.4 No sign, poster, display or other advertising device of any character shall be erected or maintained anywhere on the Property without the prior written consent of the Board of Directors, provided, however, that the restrictions shall not apply to any sign which states the Residence is for sale, or lease, so long as it is consistent with the standards promulgated by the Board of Directors and in accordance with the above sections.

8.5 Signs other than Association approved signs will be removed from the property.

9.0 SUB-LEASING

Owners shall be responsible for their tenants' compliance of these Rules and Regulations and CC&Rs. Penalties imposed by the Board of Directors for violations will be issued to the Owner of the unit who is responsible for payment.

10.0 PATIOS AND BALCONIES

10.1 The patios are for recreational use and may not be used for storage purposes. Patios must be maintained in a neat and clean condition.

10.2 Umbrella type clothes lines are allowed during the hours of 0600-1200 and are not to be left up overnight**.**

10.3 Planter boxes, potted plants, and statuary of any form or kind shall not be placed on patio walls, balcony walls, or in common area planters.

10.4 Trees, shrubs or vines shall not be attached to, allowed to climb, touch, or overhang any Association maintained surface. The expense of repairing any damage caused by vegetation of any kind planted in patios by a resident will be borne by the Owner and may include an assessment penalty.

10.5 Wind chimes, or any other device that is intended to create noise may be attached or placed on any patio, balcony or the exterior of a unit provided there is no complaint from any other resident.

10.6 Architectural modifications must be approved by the Board of Directors.

11.0 ALTERATION OF COMMON AREAS

Order: 6ZRKXQLHX
Address: 600 Wakefield Ct Unit 102
Order Date: 06-15-2020
Document not for resale
HomeWiseDocs

11.1 Landscaping and maintenance are provided by the Association. **Removal or alteration of landscaping may not be performed by anyone except under the direction of the Board of Directors**

11.2 The common area may not be altered in any manner except under the direction of the Board of Directors.

11.3 Commercial ventures are not permitted anywhere in the common areas, including the clubhouse and pool.

11.4 Patio and entry way gates may not be altered or replaced without the approval of the Board of Directors.

12.0 POOL RECREATION FACILITIES (INCLUDING POOLS, SPA, SAUNAS AND RESTROOMS)

12.1 General

12.1.1 The use of the pool recreation facilities is limited to residents and their guests. A maximum of four (4) guests per household may use the pool recreation facilities at one time provided guests are accompanied by a resident of the household who is 14 years of age or older.

12.1.2 The pool recreation facilities shall only be used from 7:00 A.M. to 10:00 P.M. daily.

12.1.3 Users of the pool recreation facilities shall keep the gates locked and restroom entrances locked at all times.

12.1.4 Users of the pool recreation facilities shall be attired in either street clothes or regulation swimwear at all times.

12.1.5 Each household will be issued only one key to the pool recreational facilities. Replacement keys will be issued at a cost of $100.00 to the homeowner.

12.1.6 The Board of Directors has the authority to suspend the privilege to use the pool recreational facilities to anyone at any time.

12.1.7 A 'No Smoking' policy is in effect at all recreation facilities including the clubhouse, pools, spas, saunas and restrooms.

12.2 **CHILDREN 14 YEARS OF AGE AND YOUNGER**

12.2.1 Children 14 years of age and younger shall not use the pool recreation facilities unless accompanied and closely supervised by an adult over the age of 18. Supervision and discipline of these children shall be done quietly and in a manner that does not disturb others.

12.2.2 **For their safety, c**hildren 14 years of age and younger shall not use the Spa unless accompanied and closely supervised by an adult over the age of 18. Spa usage is not recommended for children and infants for health reasons.

12.2.3 No person that is subject to involuntary natural bodily functions shall use the pools or spa without swimming apparel that has snug-fitted leg openings.

12.3 **USE OF THE POOL RECREATION FACILITIES**

12.3.1 There shall be no diving, running, pushing, or horseplay at any time in the pool recreational facilities. Gates and fences shall not be climbed.

12.3.2 Patio furniture and life-saving equipment provided at the pool facilities shall be used for their intended purposes only. These items are not to be removed from the pool facility at any time nor placed in the pool or spa

12.3.3 Pets are not allowed in the pool recreation facilities at any time.

12.3.4 Loud or disturbing noise is prohibited. Only headphones are permitted when listening to radio, tape deck or stereo equipment.

12.3.5 Bicycles, tricycles, skateboards, roller-skates, and roller-blades are not allowed in the pool recreational facilities at any time.

12.3.6 Use of pool facilities while under the influence of alcohol, narcotics, drugs or medicines is prohibited.

12.3.7 No lewd, immoral or indecent conduct is permitted.

12.3.8 Glassware of any type is not permitted in the pool recreation facilities.

12.3.9 Barbecues, hibachis, and/or other cooking apparatus shall not be used at the pool recreation facilities.

Order: 6ZRKXQLHX
Address: 600 Wakefield Ct Unit 102
Order Date: 06-15-2020
Document not for resale
HomeWiseDocs

12.3.10 Users of the pool recreation facilities shall not litter.

12.4 **USE OF THE POOLS AND SPA**

12.4.1 Games in the pool with willing participants are permissible; however, dunking and splashing are prohibited. Noise must be kept to a minimum.

12.4.2 Small inflatable toys for children, life-saving flotation devices, small inflatable and flotation devices used for exercise may be used in the pools to the extent they do not annoy other users of the pool at any time.

12.4.3 Flotation devices of any kind, inflatable balls, toys, rafts, boards, etc. shall not be used in the spa.

12.4.4 The pool and spa shall not be used by persons with skin disorders, colds, coughs or communicable diseases.

12.4.5 Persons using tanning oil, sunscreen preparation or hair oil must shower before entering the pools and spa.

13.0 PETS

13.1 Owners of a pet(s) are responsible for any damage caused by them to common areas or private property.

13.2 Owners of a pet(s) shall pick up their pets' waste and dispose of it in a sanitary manner on their own property.

13.3 Pets are not allowed in the clubhouse or the pool recreational facilities.

13.4 Owners of a pet(s) are responsible for any noise or disturbance caused by their pet(s).

13.5 Dogs shall be held on a leash no longer than 6 feet in length while outdoors.

13.6 No more than 4 pets per unit will be permitted per Long Beach Municipal Code.

14.0 CLUBHOUSE FACILITIES (excluding pool recreational facilities)

14.1 General

14.1.1 The clubhouse facilities are available for rental by any Bixby Village Member for the use of Bixby Village Members and their guests. The facility may not be continually used by any Member for profit making venture(s).

14.1.2 Rental of the clubhouse may be subject to approval of the Board of Directors. Rental of the clubhouse facilities does not include the use of the pool recreational facilities as defined in Section 12.0 above. Please note, the conference table may not be moved or used as a staging base for catering purposes.

14.1.3 The clubhouse facilities are available for use without charge to any Bixby Village group, contingent upon the functions/meetings being open to all Bixby Village homeowners. The Board will entertain requests for waiver of the usage fee for group events that include only limited Bixby Village homeowners on a case by case basis (i.e. a block party open to all residents of a single street rather than the entire community). The deposit fee will continue to be collected regardless of the waiver of the usage fee.

14.1.4 It is the responsibility of the Bixby Village Member to pay for any damage, breakage or extraordinary wear and tear to or missing articles from the clubhouse facilities. This responsibility is not limited to the amount of the security/cleaning deposit.

14.1.5 Bixby Village Members renting the clubhouse facilities are responsible for cleaning the facility after use in accordance with the instructions from the clubhouse coordinator. Cleaning must be completed by 9:00 A.M. the following morning. The cost of extra services required to restore the clubhouse to a rentable condition will be deducted from the security/cleaning deposit.

14.1.6 Bixby Village Community Association assumes no responsibility for any personal items left in the clubhouse facility at termination of cleaning.

14.1.7 Use of the clubhouse fireplace is strictly prohibited.

14.1.8 No decorations may be taped, nailed, stapled or in any other matter attached to walls. Decorations may be hung over the fireplace using string attached to existing, provided hooks.

Order: 6ZRKXQLHX
Address: 600 Wakefield Ct Unit 102
Order Date: 06-15-2020
Document not for resale
HomeWiseDocs

14.2 **USE OF CLUBHOUSE FACILITIES**

14.2.1 Bixby Village Members renting the clubhouse facilities and their guests shall conduct themselves in a manner consistent with standards and expectations of a residential community. Members and their guests shall remain within the clubhouse facility (including the patio) except for entry and exit. They shall not create a disturbance or nuisance to users of the pool facility or the surrounding area.

14.2.2 The Bixby Village Member that has reserved the clubhouse facilities must be on the premises of the clubhouse facilities for event set-up, the duration of the scheduled event, and the post-event cleanup.

14.2.3 Music volume shall be at a reasonable level at all times. When clubhouse use is permitted beyond 10:00 P.M., the music volume shall be inaudible to the surrounding vicinity.

14.2.4 All exterior doors and windows of the clubhouse facility shall be closed at 9:00 P.M.

14.2.5 Alcoholic beverages may be served in the clubhouse facility by the Bixby Village Member renting the facility or a licensed caterer provided there is no charge to the consumer.

14.2.6 The services of a commercial caterer may be used at the clubhouse facility provided that the caterer shows proof of a current caterer's license, liability, and automobile insurance of at least $100,000/$300,000.

14.3 **RENTAL OF THE CLUBHOUSE FACILITIES**

14.3.1 The clubhouse facilities may be reserved by contacting the property management company and completing a reservation form for the desired date of use. Reservations are on a first-come, first served basis.

14.3.2 The clubhouse is available for rental Sunday through Thursday from 9:00 A.M. to 10:00 P.M.; Friday and Saturday from 9:00 A.M. to 11:00 P.M.

14.3.3 The non-refundable rental cost of the clubhouse is $75.00

14.3.4 The rental cost in full, and a refundable security/cleaning deposit of $150, shall be paid to the property management company prior to the event, in the form of two separate checks each payable to: Bixby Village H.O.A. At the discretion of the clubhouse coordinator, the rental cost for "prime rental dates (e.g., holidays, month of December)" may be required to be paid-in-full at the time of making the reservation.

15.0 MISCELLANEOUS

15.1 Stereos, cars or other equipment that creates **noise** or a disturbance may not be used in any manner that disturbs the neighbors or surrounding environment.

15.2 **Trash recycling bins** are not to be placed in view any earlier than 3 PM the day preceding pick-up and are to be removed by 10 PM the day of pick-up.

15.3 Residents or contractors shall not **climb upon any roof surface** without the prior written approval of the Board of Directors.

15.4 **Wild Animals**: Homeowners shall NOT leave food or water exposed and available so as to attract wild animals (i.e., feral cats, coyotes, raccoons, squirrels, mice, possums, etc.). Animal Control guidelines shall be followed pertaining to not domesticating wild animals.

16.0 ENFORCEMENT PROCEDURES

16.1 Discovery of Violation

16.1.1 Any violation, other than a parking violation that is subject to towing, that is an alleged violation of the Governing Documents and the Rules and Regulations of the Association will be processed according to the procedures outlined herein. In the event of an observed or reported violation, the Board may act as follows:

16.1.1.1 Send a letter to the Owner stating the alleged violation and the date needed to cure said violation.

16.1.1.2 Upon expiration of the cure date, if the violation still exists, a second letter will be sent stating that the failure to abide by the Association Rules and

Order: 6ZRKXQLHX
Address: 600 Wakefield Ct Unit 102
Order Date: 06-15-2020
Document not for resale
HomeWiseDocs

Regulations has imposed a hardship on the Association and the Owner will be asked to attend a hearing with the Board of Directors

16.1.1.3 The Owner will be notified as to the decision rendered by the Board of Directors as a result of the hearing. If the Owner is found to be in violation of the Association's governing documents, the Board will either:

16.1.1.3.1 Seek remedy by use of the legal system,

16.1.1.3.2 Apply monetary fines to the Owner's assessment billing,

16.1.1.3.3 Choose to correct (or caused to be corrected) the violation and assess the Owner for reimbursement of costs, suspend voting and other privileges,

16.1.1.3.4 A combination thereof.

16.1.1.3.5 If the decision is to pursue a monetary fine system, the Bixby Village Fine Schedule will apply.

16.2 **Fine Schedule**

16.2.1 If the result of the hearing is a monetary fine, a fine of $50.00 will be applied to the Owner's account. If the violation continues past the hearing and the first fine stage, additional hearings will be scheduled with the homeowner and the fines may be doubled with each hearing. Any fines not paid may result in legal action in accordance with California law.

16.2.2 The Board may determine to use the legal system or cause correction of the violation to affect a cure, and the Owner may be responsible for legal fees and or reimbursement of costs to the Association.

16.2.3 Should a violation occur which imposes a financial obligation on the Association, the party responsible for said violation shall reimburse, by way of a Special Assessment, the Association for this financial obligation. If, for example, a party damages a fence, tree or any other common property, repair and replacement costs will be charged to that party.

17.0 ARCHITECTURAL GUIDELINES

17.1 General

17.1.1 As set forth in the Covenants, Conditions & Restrictions, the Architectural Committee is vested with the power to review and approve all exterior Improvements to all residences for Bixby Village Community Association. Such Improvements include, without limitation, additions, modifications and alterations to the exterior of the residence, signs, fences, walls, landscaping screens, patios and patio covers and any other modification to the exterior of the residence. The Architectural Committee does not seek to restrict individual creativity or personal preference, but rather to help assure continuity in design, which will help preserve and improve the appearance of the Community and enhance the property values of all Members in the Community.

17.1.2 Prior to commencement of any addition, alteration or construction work of any type to the exterior of any residence in Bixby Village Community Association, the Owner must first submit an application to the Architectural Committee for approval of such work. Failure to obtain prior written approval of the Architectural Committee may constitute a violation of the governing documents and may require modification or removal of unauthorized works of Improvements at the Member's expense. The Board may, from time to time, adopt and promulgate Architectural Standards to be administered through the Architectural Committee, as it deems appropriate

17.1.3 The City of Long Beach or other governmental agencies prior to the commencement of any work may require a building or other permit. Neither the Architectural Committee nor the Association assumes any responsibility for failure to obtain such permits .Approval of such permit(s) by the City of Long Beach or other governmental agencies does not waive the obligation to obtain Architectural Committee approval. All architectural submittals must also comply with the Bixby Village Architectural Guidelines/Rules stated herein.

17.1.4 The Committee approves plans and specifications as to style, exterior design, appearance and location and does not approve engineering design or compliance with zoning and building ordinances. The Committee has the right to inspect improvements

Order: 6ZRKXQLHX
Address: 600 Wakefield Ct Unit 102
Order Date: 06-15-2020
Document not for resale
HomeWiseDocs

constructed or being constructed to ascertain that such improvements have been or are being built in compliance with the plans and specifications approved by the Committee.

17.1.5 Established drainage patterns of the lot cannot be changed. All water must drain to pre-installed drains or drain to the street.

17.1.6 Any damage to your house, your neighbor's house, the fences or common area must be repaired to its original condition.

17.2 **Submission Procedures and Requirements**

17.2.1 All requests ("Requests") for Architectural Committee approval are to be made using the Bixby Village Bixby Village Homeowner Request for Exterior Change Form that is available on the website.

17.2.2 Submission of Requests: All Requests are to be made to the Bixby Village Community Association Architectural Committee c/o the management company.

17.2.3 Construction Drawings: Plans and specifications for works of Improvements must be prepared in accordance with the applicable building codes, and with sufficient clarity and completeness to enable the Committee to make an informed decision on your request.

17.2.4 Submission of Applications/or Improvements: Please forward via email or provide three (3) sets of your proposed plans and specifications, together with the Bixby Village Homeowner request for Exterior Change Form which can be found on the Bixby Village Homeowners website, with the signatures of the facing, adjacent and impacted Owner(s) to constitute a complete Application. Please email or mail this information to the management company. One (1) set will be returned after completion of the review. A copy of all plans is kept for the Association's file. The plans should include:

17.2.4.1 Plot plan drawn to scale showing the following:

17.2.4.2 All proposed Improvements and relevant elevations, together with the desired location of such Improvements to the residence.

17.2.4.3 Complete dimensions of the proposed Improvements.

17.2.4.4 Description of materials to be used, including the proposed color scheme. Samples should be provided.

17.2.4.5 Drainage plans (if applicable) where the established drainage pattern might be altered by the proposed Improvements

17.2.4.6 Floor plans (if applicable) showing the overall dimensions and area of improvements reflecting your preliminary design concept.

17.2.4.7 Description of proposed construction scheduled.

17.2.4.8 Landscape plan and working drawings (if applicable).

17.2.4.9 If proposed Improvements require access over the Common Area of Common Facilities for purposes of transporting labor or materials, written permission shall be required from the Association. Any such requests must be filed with the Board of Directors prior to the commencement of your Improvements.

17.2.4.10 Any other information or documentation deemed to be necessary by the Architectural Committee in evaluating your request.

17.2.4.11 Description of proposed construction scheduled.

17.2.4.12 Landscape plan and working drawings (if applicable).

17.2.4.13 If proposed Improvements require access over the Common Area of Common Facilities for purposes of transporting labor or materials, written permission shall be required from the Association. Any such requests must be filed with the Board of Directors prior to the commencement of your Improvements.

17.2.4.14 Any other information or documentation deemed to be necessary by the Architectural Committee in evaluating your request.

17.3 Failure to comply with the requirements and procedures set forth herein shall cause your request to be delayed pending submission of other information and documentation to the Architectural Committee. An incomplete Application shall affect the time limits for approval otherwise reserved in favor of the Architectural Committee.

17.4 **Final Approval by the Architectural Committee**

Order: 6ZRKXQLHX
Address: 600 Wakefield Ct Unit 102
Order Date: 06-15-2020
Document not for resale
HomeWiseDocs

The Architectural Committee shall give final approval or disapproval of your request within forty-five (45) days from submission of a completed Application (including all the required supporting information and documentation).

17.5 **Disapproval by Architectural Committee Appeal**

In the event the Committee disapproves the plans and specifications submitted to the Architectural Committee, the party or parties making said submission may appeal in writing to the Board of Directors of the Association within thirty (30) days following the final decision of the Architectural Committee. The Board of Directors will then submit the written request to the Architectural Committee for review, whose written recommendations are to be submitted to the Board of Directors. Within forty-five (45) days following receipt of the request for Board appeal, the Board shall render a written decision.

17.6 **Architectural Standards**

17.6.1 **Satellite Dish**

17.6.1.1 Installation of satellite, cable or FIOS communication systems are to conform to the "BVCA Architectural Guidelines for the Installation of Satellite, Cable and FIOS Communication Systems." These guidelines are presented in Appendix A of this document, and it is strongly recommended that these guidelines be shared with the installer prior to the commencement of work.

17.6.1.2 In addition to the specific details described in the guidelines, the homeowner should be aware of the following;

17.6.1.3 Homeowners will be responsible for the cost to repair any direct damage to the roof, exterior siding or trim and any consequential damage resulting from leaks, dry-rot, etc. as a result of the installation of the communications systems.

17.6.1.4 If the installation is done incorrectly or in an inappropriate location the BVCA will give the homeowner written notification of the violation and it will be the homeowner's responsibility to correct the situation within (10) days of receipt of that notice.

17.6.2 No **advertising signs** of the contractor may be displayed at the work-site.

17.6.3 All changes that involve common walls and fences must be approved by the owners of the common wall and fence

17.6.4 **Patio Gates**

17.6.4.1 Gates must be painted white to match the trim of the house.

17.6.4.2 Patio gates may be no higher than patio walls or installed lattice work.

17.6.4.3 Only mesh screens, iron bars, clear Lucite, and wood or polyvinyl chloride (see 17.6.5) may be permanently attached to the inside of patio gates with screws or welded. Lattice must match any patio wall extensions. The Architectural Committee must approve type of mesh screening in advance. Any gate with any attachment then becomes a homeowner responsibility and must be maintained at the discretion of the Board of Directors.

17.6.4.4 Owners of middle units of attached town homes may install a wrought iron gate between the garages. These gates must be unlocked to give access to the landscaper to common areas.

17.6.5 **Patios**

17.6.5.1 All patio materials, including posts and latticework, must be made of wood or Polyvinyl Chloride which must be Ti02 quality white vinyl.

17.6.5.2 Patio cover and latticework must be made of wood or Polyvinyl Chloride which must be quality white vinyl. The latticework may only extend patio walls 24" except latticework that has an 8-inch solid top. In this case the extension may be up to 32". Latticework must be white to match the trim of the house, and must be raised off balcony cap 2-3".

17.6.6 **Patio Covers** must have city permits. Patio covers and latticework extensions may not be attached to the same wall except on patio sidewalls. On the sidewalls latticework may extend to the top of the patio cover. Some sidewalls are deemed too long to have full latticework attached to the patio cover. Patio covers must be white to match the trim of the house.

Order: 6ZRKXQLHX
Address: 600 Wakefield Ct Unit 102
Order Date: 06-15-2020
Document not for resale
HomeWiseDocs

17.6.7 Brick and tile **porches and sidewalks** are allowed but sidewalks may only extend to the street sidewalk and must be flush with the street sidewalk.

17.6.8 **Landscape Lighting** will not be allowed in the common area. Exceptions for reasons of safety or security may be made upon appeal to the Board of Directors.

17.6.9 **Exterior Lights** must be wall mounted, carriage style, and white, black or antique dull brass. Size will be determined by the dimension of the area to be illuminated. Additional security lighting may be applied for and the following conditions will apply.

17.6.9.1 The fixture must be of a decorative type, compatible to existing fixtures and of the same color.

17.6.9.2 All of the candle power generated must be contained in the boundaries of the patio or porch area. No light shall trespass on a neighboring window or patio.

17.6.9.3 Photocells and motion detectors for switching may be used.

17.6.10 **Garage Doors**

17.6.10.1 Before a homeowner makes any changes or replacements to a garage door they must submit the "Bixby Village Homeowner Request for Exterior Change" to the management company, which forwards it to the Architectural Committee for review and approval. Complete instructions are on the form but it must contain a detailed description of the garage door, manufacturer and pictures of the specific door being requested. In addition, for the form to be accepted by the Committee it must have the signature of at least three of the Owners whose homes are either adjacent to or across the street from that of the requesting homeowner.

17.6.10.2 The specifications for garage doors as well as other helpful information are contained in the "Architectural Standards for Garage Doors" found in Appendix C. The "Bixby Village Homeowner Request for Exterior Change" can be found on the Bixby Village Homeowners website.

17.6.11 **Front Entrance Doors:** The doors shall be of solid wood panel construction or solid wood panel construction with decorative glass; either type may or may not have accompanying side lites. Decorative glass and/or side lites should complement the main door and be consistent with the architectural character of Bixby Village. The door shall be a natural wood product and stained a medium to dark brown color and varnished or otherwise protected with a finish coat that minimizes sun and weather damage. Examples of such finish coats are McCloskey's Man O' War Marine Spar Finish (Satin Finish), or Dunn-Edwards Defthane Polyurethane (Satin Finish). Painted door colors are not allowed with the exception of white that matches the building trim. Submittal of the Bixby Village Homeowner Request for Exterior Change for front door replacement shall be supported with colored pictures of the original and proposed new front door and stain; both with detail sufficient for the Architectural Committee to adequately determine the appropriateness of the request. The homeowner is responsible for the maintenance and care of their front doors. If requested by the homeowner, the Association will varnish only the front doors during the regular paint cycles.

17.6.12 **Flat skylights**, in addition to our standard convex skylights, will be allowed provided the homeowners sign an "Improvement Agreement" before installation. This agreement will hold the homeowner responsible for all repairs and replacement and ensure that any purchaser of homeowner's separate interest is on notice of and bound by the obligations set forth in the Improvement Agreement.

17.6.13 The only style of front screen door allowed is the "invisible" or "phantom" type in white.

17.6.14 **Exterior Paint Colors**: Bixby Village has an established color palette for exterior paint surfaces. The Board of Directors will from time-to-time entertain updating of the palette choices to maintain a current and vibrant appearance. A current schedule of the approved color palette is on record with the HOA Management Company. Some existing building colors and/or color tones will be changed by the Architectural Committee to better balance

Order: 6ZRKXQLHX
Address: 600 Wakefield Ct Unit 102
Order Date: 06-15-2020
Document not for resale
HomeWiseDocs

the master planned streetscapes. The Architectural Committee will be in charge of any and all color change requests.

17.6.15 **Townhome patio doors** will be aluminum clad white vinyl style "sliding" or "French casement hinged" doors provided they have the exact same spacing and number of window divider mullions so the exterior look is identical to original build sliders, and there is no additional HOA painting surface maintenance.

17.6.16 **Window replacements** for Patio homes may be with or without mullions. Replacement with non-mullions may be made ONLY as follows: 1st floor level windows only; must be clear tempered glass; aluminum clad white vinyl frames; must not be "boldly" visible from the street (as compared to "passively visible at a passing glance); and, must have viewing Owners' approval on *Bixby Village Homeowner Request for Exterior Change*. For Townhomes, mullions remain a requirement of "like-for-like" replacement. In all instances window screening or dark tinting is not allowed that substantially obstructs the viewing of existing mullions from the exterior.

17.6.17 **Property Transfer Checklist**:

17.6.17.1 Prior to the close of escrow it is the seller's or seller's agent's responsibility to contact the Bixby Village Management Company with a request to schedule an Architectural Committee inspection. This inspection is necessary to insure that any violations – new or those that the homeowner earlier agreed to correct at the time of sale – have been (i) corrected by the seller or (ii) agreement is reached between the buyer and seller on how the corrections will be performed.

17.6.17.2 The management company must be notified at least 30 calendar days prior to the date of the inspection or close of escrow; whichever is earliest. There is no charge for a routine scheduled inspection.

17.6.17.3 Copies of the "Architectural Property Transfer Checklist" and the contact information for the Bixby Village management company are available on the Bixby Village HOA website. Any questions regarding the inspection should be directed to the BVCA management company.

17.7 **Solar Tubes & Water Heater Vents**

17.7.1 General Requirements

17.7.1.1 The installation or replacement of any solar tube or water heater vent requires the submission and approval of the Bixby Village Homeowner Request for Exterior Change". The form and instructions can be found on the Bixby Village HOA website.

17.7.1.2 The homeowner is responsible for any damage to any property owned or maintained by the homeowners association, including the association owned roof, resulting from the existence, installation, maintenance, replacement and/or repair of any of the improvements listed in this section.

17.7.1.3 The installation of any device must be in compliance with all applicable state and local building codes.

17.7.1.4 The homeowner is responsible for the maintenance, repair, and replacement of any improvement listed in this section.

17.7.1.5 The homeowner agrees to hold the association harmless from and against claims and liabilities resulting from the installation, use, or repair of any of the improvements listed in this section.

17.7.1.6 All exposed metal parts – including tubing, ducting, flashing, etc. must be painted with a color to match the existing metal parts of the roof.

17.7.1.7 Once installed the units are to remain a part of the property and are not to be removed at the time of sale.

17.7.2 **Water Heater Vents**

17.7.2.1 Vents for tank and tank less water heaters must adhere to the following guidelines

17.7.2.1.1 Through the wall venting is not allowed.

Order: 62RKXQLPX
Address: 600 Wakefield Ct Unit 102
Order Date: 06-15-2020
Document not for resale
HomeWiseDocs

17.7.2.1.2 All vents must utilize the existing roof penetration.

17.7.3 **Solar tubes**

17.7.3.1 Installation of solar tubes must adhere to the following guidelines;

17.7.3.1.1 The installation must be as visually unobtrusive as possible. The system should be only "passively" visible at a passing glance and in harmony with the existing color schemes to minimize its presence.

17.7.3.1.2 The diameter of the solar tube is not to exceed 14 inches and the roof penetration must fit between the rafters. No modification of the supporting roof structure is allowed.

17.7.4 **Golf Course Perimeter Wall Railing** requirements and guidelines are presented in Appendix B of this document.

17.7.5 **Automobile Electric Charging Stations** may be installed in the interior of a garage Only and Without Exception. All electrical codes must be met.

17.7.6 **Solar Energy Systems – Installation Rules and Guidelines**

17.7.6.1 Prior to installing a solar energy system, homeowner ("H/O") must submit to the Architectural Review Committee ("AC") an application and detailed plans and specifications (how the system is to be attached to the roof structure, etc.).

17.7.6.2 The architectural submittal must include a rendering of the proposed system showing dimensions and location. The submittal must also include a roof structural analysis performed by a licensed and registered structural engineer. The system, in the location contemplated, must be as visually unobtrusive as possible without significantly increasing the cost or decreasing its efficiency (as defined within Civil Code Section 714). The system should be only "passively" visible at a passing glance through use of low profile panels and/or in harmony with the existing color schemes to minimize appearance.

17.7.6.3 The H/O must obtain any and all required permits and local, state, and federal approvals and certifications. A solar energy system for heating water must meet all applicable safety and performance standards and is required to be certified by the Solar Rating Certification Corporation (SRCC) or other nationally recognized certification agencies. A solar energy system for producing electricity must meet all applicable safety and performance standards established by the National Electric Code, the Institute of Electrical and Electronics Engineers and accredited testing labs such as Underwriters Laboratories and, where applicable, rules of the Public Utilities Commission regarding safety and reliability. The above-referenced certifications for both water heating and electricity producing solar energy systems must be for the entire solar energy system and its installation.

17.7.6.4 H/Os are advised to consult with Southern California Edison to insure their systems are registered with it to assure safety, and avoid liability/injury risk with respect to solar panel electrical safety and the reverse current danger that can occur during power outage.

17.7.6.5 The H/O must enter into an Improvement Agreement to be recorded in the County Recorder's Office which provides, in part, that H/O is responsible for:

17.7.6.5.1 Insuring, maintaining and repairing the system

17.7.6.5.2 The cost of any and all maintenance and repairs to the Common Area by the Association caused by the installation, use and repair of the system

17.7.6.5.3 Indemnifying, defending and holding the Association harmless from and against claims and liabilities resulting from the installation, use or repair of the system

17.7.6.5.4 The cost of removal of the system and replacement of the system during Association re-roofing,

17.7.6.5.5 Ensuring that any purchaser of H/O's separate interest is on notice of and bound by the obligations set forth in the Improvement Agreement

Order: 62MRXQEHX
Address: 600 Wakefield Ct Unit 102
Order Date: 06-15-2020
Document not for resale
HomeWiseDocs

17.7.6.6 **Wind Electrical Generating Systems** are not a part of AB 1892 and at present are not allowed in Bixby Village.

18.0 ELECTIONS AND VOTING - The following rules and procedures shall apply in connection with any matter presented to the Members for approval:

18.1 **General Election Rules**

18.1.1 The Board of Directors shall determine the date, time and place of the annual meeting of the owners in accordance with the Association's Amended and Restated Bylaws ("Bylaws").

18.1.2 The number of directors who are scheduled to be elected and the terms for each shall be determined in accordance with the association's governing documents and stated in the notice of the meeting.

18.1.3 The notice of the meeting along with a secret ballot on which to vote and one set of double envelopes along with instructions for voting shall be mailed to all owners at least 30 days prior to the scheduled election date.

18.1.4 The record date for determining members entitled to receive notice of the meeting and entitled to vote shall be set by the board of directors.

18.1.5 All candidates or members advocating a point of view shall have equal access to all association media, newsletters and websites during a campaign for purposes reasonably related to that election.

18.1.6 The association will not edit or redact any content from candidate or member communication. The association may include a statement specifying that the candidate or member and not the association is solely responsible for the content of the communication.

18.1.7 All candidates and members will have equal access at no cost to any common area meeting space during a campaign for purposes related to the election. The Association may meet the requirements of this section by hosting a "Meet the Candidates Night", or other such special meeting, so long as every Candidate and/or Member is provided with an equal opportunity to participate in the event.

18.1.8 Association funds may not be used for campaign purposes in connection with any board election.

18.1.9 Within 15 days of the election, the board of directors shall publicize the results of the election in a communication directed to all members

18.2 **Candidate Qualifications**

18.2.1 Candidates must be resident Members who meet the candidacy requirements set forth in the Bylaws.

18.3 **Nomination of Candidates**

18.3.1 The Association shall mail to each owner a Candidate Nomination Form, which will include a deadline for receipt by the association.

18.3.2 Candidates who meet the qualifications and whose nomination forms are submitted prior to the deadline will have their name printed on the secret ballot and their statements retyped verbatim and distributed to the membership.

18.3.3 Candidates' names will be listed in alphabetic order on the ballot with incumbents noted accordingly.

18.3.4 Candidates can be nominated from the floor at the election meeting by another member or by self-nomination. Any candidate nominated from the floor at the meeting must be present to accept the nomination.

18.4 **Voting**

18.4.1 All members in good standing who have not had their voting privileges suspended at a duly held hearing are entitled to vote. Following Notice and Hearing in compliance with the Bylaws, the Association's Board of Directors may suspend any Owner's right to vote as a penalty for violation of the Association's governing documents.

18.4.2 There is one class of voting, designated as Class A.

18.4.3 Members entitled to vote may do so by secret ballot or may designate a proxy holder who is an Association member to vote for them by secret ballot at the election.

Order: 62RKXQLPX
Address: 600 Wakefield Ct Unit 102
Order Date: 06-15-2020
Document not for resale
HomeWiseDocs

18.4.4 Secret ballots cast by mail shall be irrevocable.

18.4.5 The polls for any vote of the membership shall be open from the date the Secret Ballot is mailed and shall close when the Inspector(s) of Election determine that the ballots shall be counted, unless the Inspector determines another time for the polls to close.

18.5 **Inspectors of Election**

18.5.1 The Board of Directors shall appoint one (1) or three (3) inspector(s) of election to serve at any regular or special meeting of the members.

18.5.2 The inspector(s) may be a member of the Association provided such member is not a member of the Board of Directors or a candidate for the Board Directors or related to a member of the Board of Directors or a candidate for the Board of Directors.

18.5.3 Inspector(s) shall be independent third parties which can also include, but is not limited to, a volunteer poll worker with the county of registrar of voters, a licensed CPA or a notary public.

18.5.4 The appointed Inspector(s) of elections must be an independent third party and may include, but is not limited to, a Member of the Association or any person or entity receiving compensation from the Association.

18.5.5 If there are three inspectors of election, the decision or act of a majority shall be effective in all respects as the decision or act of all.

18.5.6 The inspector(s) will determine the number of memberships entitled to vote and the voting power of each in accordance with the association's bylaws.

18.5.7 The inspector(s) will determine the authenticity, validity and effect of proxies, if any.

18.5.8 Unless the inspector(s) designate a different location to receive ballots, the location to receive ballots will be the association's managing agent's business office address.

18.5.9 The inspector(s) shall hear and determine all challenges and questions in any way arising out of or in connection with the right to vote.

18.5.10 The inspector(s) shall count and tabulate all votes at a duly noticed board or member meeting in an open setting allowing members and candidates to witness the counting and tabulation of the votes.

18.5.11 Anyone who is not an inspector of election, or appointed to assist the inspector(s) of election, must remain at least five feet away from the counting area. No person may interfere with, harass or otherwise communicate with the inspector(s) of elections while the count is taking place. Members or persons not specifically authorized to do so may not touch any secret ballot or other election materials.

18.5.12 The inspector(s) can cause the removal of any observer who causes interference with or disrupts the counting or tabulation process.

18.5.13 The inspector(s) shall determine when the polls will open and close.

18.5.14 The inspector(s) shall determine and announce the results of the election promptly to the board of directors. The results shall be recorded in the next regular session board meeting minutes, and shall report the results of the election.

18.5.15 An inspector of election shall perform his or her duties impartially, in good faith, to the best of his or her ability and as expeditiously as is practical.

18.5.16 The inspector(s) shall perform any acts as may be proper to conduct the election with fairness to all members in accordance with the law and all applicable rules of the association including these election rules.

18.5.17 The board of directors may remove and replace any inspector of election prior to the tabulation of votes if an inspector of election resigns or if the board reasonably determines that an inspector of election will not be able to perform his or her duties impartially and in good faith.

18.6 **Ballots and Tabulation**

18.6.1 Once the association receives a ballot it is deemed irrevocable.

18.6.2 Ballots shall ensure the confidentiality of the voter and shall not identify the voter by name, address, lot, parcel or unit number and may not require a signature.

18.6.3 The ballot itself shall be inserted into an envelope that is sealed. This envelope shall be inserted into a second envelope that is sealed. In the upper left hand corner of the second

Order: uERKXQEmX
Address: 600 Wakefield Ct Unit 102
Order Date: 06-15-2020
Document not for resale
HomeWiseDocs

envelope, the voter must print and sign his or her name, address, and lot, parcel or unit number that entitles him or her to vote. The second outer envelope is addressed to the inspectors of election at the designated address.

18.6.4 Owners may return their secret ballot by mail, hand deliver it to the meeting, or complete the ballot at the meeting.

18.6.5 Only those ballots delivered to the inspectors of election prior to the polls closing shall be counted. All ballots must be received via double envelopes.

18.6.6 If a member loses his or her ballot, a new one can be obtained from the inspector(s) of election, however, if a ballot envelope is already on file from that unit, then no new ballot will be given.

18.6.7 A member who signs or otherwise marks his or ballot with an identifying mark waives his or her rights to secrecy.

18.6.8 The sealed ballots shall at all times be in the custody of the inspectors of election or at a location designated by the inspectors.

18.6.9 After the counting of the ballots and the certification of the election results by the inspectors of election, the ballots shall be transferred to the Association.

18.6.10 No person, including a member of the Association or an employee of the management company, shall open or otherwise review any ballot prior to the time and place at which the ballots are counted and tabulated.

18.6.11 After tabulation of the votes, custody of all election materials will be transferred to the custody of the association for its corporate records.

Order: 6ZRKXQLHX
Address: 600 Wakefield Ct Unit 102
Order Date: 06-15-2020
Document not for resale
HomeWiseDocs

Appendix A

BVCA Architectural Guidelines for the Installation of Satellite, Cable and FIOS Communication Systems

It is expected that homeowners will make every attempt to adhere to the following guidelines while not jeopardizing the signal quality of the communications system. If a reasonable attempt has been made and a successful installation is not possible then the homeowner should request the counsel of a member of the Architectural Committee on alternate site selection. Please call PCM to schedule an appointment with a member of the committee.

1. Satellite dishes are not to exceed one meter in diameter.
2. Because of the multiple configurations and locations of the homes in Bixby Village, location of a satellite dish can vary greatly. All attempts should be made by the homeowner to select a location that is as unobtrusive as possible - subject to proper signal reception - and preferably not on the front entrance side
3. The dish should not protrude above the roof ridge line unless there is no other location where a proper signal can be obtained.
4. The satellite dish and any support brackets are to be mounted to the fascia board (a mounting block painted white may be used) or on the white wood trim boards at the corners of the building and chimney. Under no circumstances will the satellite dish be mounted on the roof shingles, house siding, balcony railings or vent pipes.
5. Wiring is to be white in color so as to blend with fascia trim paint. Every attempt should be made to locate cables and wiring internal to the dwelling and under no circumstances should they be laid out across roof shingles or attached to the siding.
6. For multiple dwelling structures the satellite dish may only be installed on the building over the applicable homeowner's living space.
7. For cable and FIOS wiring the homeowner should make every attempt to have the wiring routed internal to the dwelling and avoid visible cables or wiring attached to roof or siding on the exterior of the house.
8. Wiring that originates from an underground source (typically FIOS and cable) must be covered in a continuous length of conduit suitable for outdoor use and terminate in the lower utility closet with an appropriate connector (See Figures 1 & 2 below). The conduit and all connectors must be painted in a color to match the body of the house or trim as appropriate. Bare conduit is not allowed.

Fig. 1 SIDE INSTALLATION

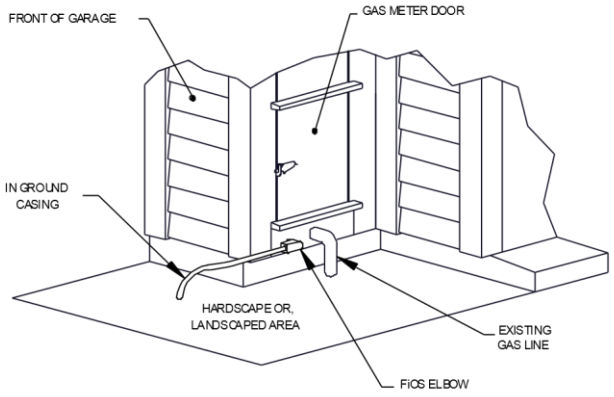

LOCATION OF IN GROUND CASING WILL VARY FOR EACH HOME. THIS OPTION ALLOWS FIOS CABLE TO BE RAOUTED NEAR THE FOUNDATION OF THE HOME AND ENTER THROUGH THE BASE BOARD BELOW THE GAS METER DOOR.

Fig. 2 FRONT INSTALLATION

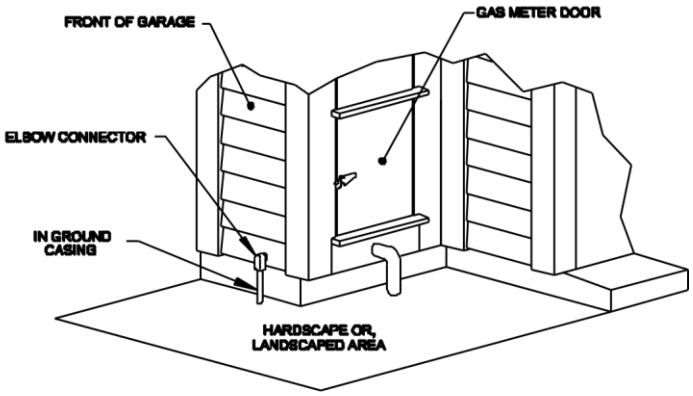

LOCATION OF IN GROUND CASING WILL VARY FOR EACH HOME. THIS OPTION ALLOWS FIOS CABLE TO BE ROUTED THROUGH THE FRONT OF THE GARAGE AND THEN THROUGH THE GAS METER CLOSET.

Order: 6ZRKXQLHX
Address: 600 Wakefield Ct Unit 102
Order Date: 06-15-2020
Document not for resale
HomeWiseDocs

Appendix B

BVCA Architectural Guideline for Golf Course Perimeter Wall Railing

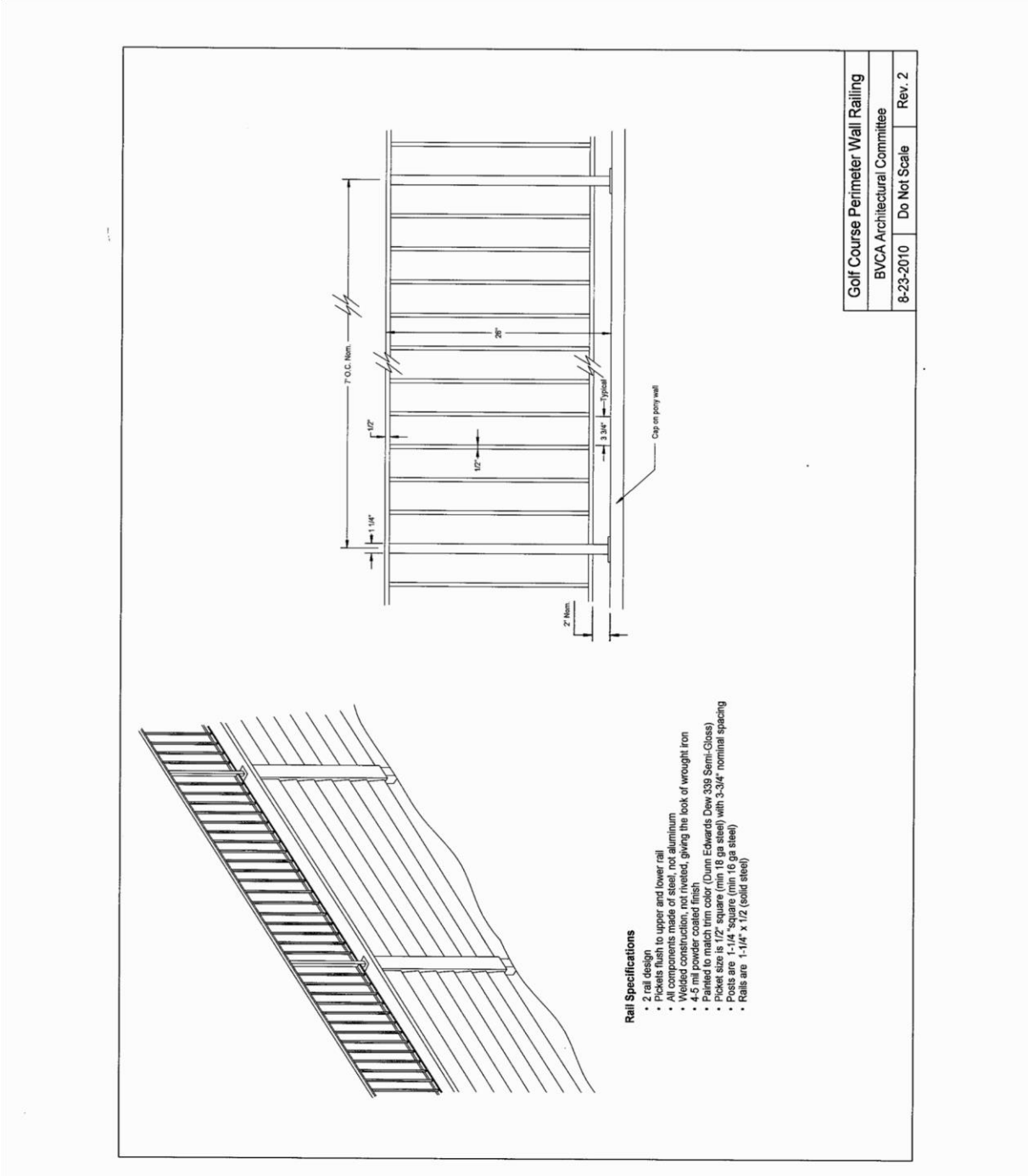

Order: 6ZRKXQLHX
Address: 600 Wakefield Ct Unit 102
Order Date: 06-15-2020
Document not for resale
HomeWiseDocs

Appendix C

BVCA Architectural Guidelines for Garage Doors

This document contains the specifications for garage doors as referenced in the Architectural Guidelines Section 17.6.10.While it is recognized that there are non-conforming garage doors within Bixby Village they should not be copied. Homeowners are required to follow the guidelines presented here for any repair or replacement of an existing garage door. Furthermore, homeowners are encouraged to choose a style matching your neighbor's in order to maintain a consistent look to the neighborhood. This is especially true for units that share a common wall.

General Requirements: A homeowner must submit an "Architectural Submission Form for Exterior Change (available on the Bixby Village Homeowners website) with a complete description of the garage door, manufacturer and pictures of the specific door being requested. In addition, for the form to be accepted by the committee it must have the signature of at least three of the neighbors whose homes are either adjacent to or across the street from that of the requesting homeowner. In the case of emergency repair or replacement the homeowner may request the committee to expedite the request and the will make a reasonable effort to do so. ALL GARAGE DOORS, REGARDLESS OF CONSTRUCTION OR STYLE MUST HAVE THE APPROVAL OF THE ARCHITECTURAL COMMITTEE BEFORE INSTALLATION.

Roll-up and Tilt-up Door Requirements

- Solid wood or metal clad construction
- White rust resistant coating (if wood, painted to match the house trim color)
- 4 high by 4 or 8 wide simulated raised panel sections with wood grain texture
- With or without windows

Window requirements;

- Window panels running horizontally in top door section
- Style closely matching those shown below
- Glazed with high impact acrylic
- Replaceable architectural feature made of vinyl



Order: 6ZRKXQLHX
Address: 600 Wakefield Ct Unit 102
Order Date: 06-15-2020
Document not for resale
HomeWiseDocs