WEST COAST
COMMUNITY MANAGEMENT
760-766-7700 | wccmanagement.com

ESTADOS HOMEOWNERS ASSOCIATION, INC.

August 22, 2022

To: All Members of Estados HOA, Inc.

Re: Rules & Regulations Updated August 12, 2022
28-day comment period complete/formal adoption notice per Civ. Code § 4045

Dear Estados HOA, Inc. Member;

This notice is being sent to you to advise that the Board met on August 12, 2022, to review all comments submitted by members on the proposed changes to the Rules and Regulations that were sent out on July 15, 2022. **The Board approved the draft changes as submitted.**

Attached you will find the most current version of your communities Rules and Regulations. Please update your records with this important document. If your unit is rented, it is your responsibility to ensure your tenant(s) and/or rental agency/agent are provided with this updated copy.

The portal (AppFolio) has also been updated with this most current version.

If you should have any questions or concerns, please do not hesitate to phone, or email me at 760-766-7700 | jhansen@wccmanagment.com.

Yours Truly,

Jamie Hansen

Jamie Hansen, CCAM®
Executive Community Association Manager

Enclosures: 2022 Rules & Regulations

ESTADOS HOA, INC.

AKA CANYON COUNTRY CLUB ESTADOS HOA

RULES AND REGULATIONS

August 12, 2022

RULES & REGULATIONS

EFFECTIVE AUGUST 12, 2022

.

GENERAL INFORMATION

Estados HOA, Inc. AKA Canyon Country Club Estados was established as a condominium community in 1975. Located on 11.79 acres of leased Indian land in the south end of Palm Springs, consisting of 120 units in nine two-story residential buildings. One-, two-, and three-bedroom units are available. All lower-level units have a patio, upper-level units a balcony.

Recreational amenities include three heated swimming pools, four spas, five tennis courts, two pickle ball courts, clubhouse, fitness center, sauna, and barbecue grills.

The maintenance needs of the community are handled by West Coast Community Management. The monthly homeowners association fee for 2022 is $455.00.

Association Problem Information

If there is a common area problem, contact the Management Company. **Phone (760) 766-7700 or via email at: jhansen@wccmanagement.com. There is a 24-hour assistance, dial 760-766-7700, option "1", and you will be directed to the After-Hours message line.** Call management for billing questions or general information about the complex.

Board of Director Meetings

The Board Normally meets the fourth Friday of each month. Summer months are optional. Time and agenda are posted on each buildings bulletin board which are by the mailboxes and the CCCE website (cccestados.com).

Homeowners are welcome to address the board at the open forum.

Key Duplication And Replacement

Common-Area Key. Some common-area facilities are accessed with a special key. If you purchased your unit, you should have received the key from the former owner or their agent at the closing. If you're renting, you should have received it from the owner or rental agent. The key contains the inscription "Do not duplicate," and replacement copies should be obtained only from Management. The fee for this is $10. Management will provide copies only to unit owners; renters should contact their landlord or rental agent.

The Clubhouse and Fitness Center require a special keyless entry card for access. If you are an owner, you can obtain a card from Management for a refundable deposit of $25. If you rent, see your landlord or rental agent.

Mailbox Key. Mailbox keys are the responsibility of the unit owner, and Management cannot provide replacement keys or locks. If the key is lost or no longer works well, the lock will have to be replaced. Take the lock to a locksmith and get a replacement. The post office can supply a replacement lock and install it for a fee. You will have to provide proof of ownership of the box or authorization to use it. Call the post office (760-322-4111) for information about this service.

Parking

Each unit comes with one assigned and numbered covered parking space, either in one of the 12 carports located throughout the property, or on the ground floor of the Clubhouse. If you are renting, you should inquire of the owner or agent about the use of the assigned parking space that comes with your unit. Do not park in someone else's space without their permission.

Carports may be used only for storage of motor vehicles. Other items are subject to removal and disposal.

Visitor parking spaces are located in marked areas, mostly along Via Carisma, as well as a few spaces off San Jose Rd. (see map). Parking in these spaces is limited to 72 hours (3 days). Vehicles left longer than that without moving are subject to ticketing and towing at the vehicle owner's expense.

Security

Most residents at Canyon Country Club Estados consider it to be a safe place to live. However, Estados is not a gated community. Do not leave anything remotely valuable visible in your automobile, and do not leave anything of serious value in the carport storage compartments.

If persons who are not residents or guests enter the property at night to use the spas call the police non-emergency line at (760) 323-8116 to report the trespassers.

In an emergency, call 911.

Fruit Trees

The property is abundant with citrus trees -- orange, grapefruit, lemon, tangerine, and more. Residents are welcome to help themselves to ripe fruit, from the tree or from the ground, at any time during the citrus season, which generally runs from December through April. To assure that there is enough for everyone who wants it, please do not take more than you can use in a reasonable period of time. Toward the end of the season, the grounds crew will remove most of the excess fruit when they trim the trees.

Introduction

The following Rules and Regulations apply at Estados HOA, Inc. AKA Canyon Country Club Estados to ensure the enjoyment of the community by all and to keep it at a consistent standard. As an Owner, Renter, or Guest, you are a part of a small community, and we must therefore have rules so that we may live together in comfort and be protected in our rights of quiet enjoyment. These rules minimize the expenses of maintaining this complex, reduce the liabilities we may incur, and ensure the neat and orderly appearance so as to enhance the resale value of the property. We also must, by law, enforce the Covenants, Conditions & Restrictions (CC&R's). Please respect these rules as an underlying framework for better group living.

Please Enjoy Yourself. You Are Welcome to Our Community.

A copy of these Rules & Regulations MUST be left in your unit for guests/renters.

General Rules

1. Loud, boisterous, or offensive conduct, loud, vulgar, or profane language, loud television or radio/stereo playing that disturbs other residents, are prohibited within residences or in the common areas.
2. No athletic activities or game playing are allowed in the common areas (except for Tennis/Pickleball and swimming in pools). Use of roller blades, skates, skateboards, bikes, or other vehicles is not allowed anywhere within the perimeter of the property of the Canyon Country Club Estados.
3. No more than 8 individuals (including children) may occupy a three-bedroom unit overnight. No more than 6 individuals (including children) may occupy a two-bedroom unit overnight. No more than 4 individuals (including children) may occupy a one-bedroom unit overnight.
4. Pets will be kept leashed when outside of their units and cleaned up after. Owners of pets are responsible for controlling excessive barking, etc.
5. Fireworks of any type are strictly prohibited in Riverside County.
6. Drying of swimsuits or laundry on outer patio walls or balconies is not permitted.
7. No pots, plants, or other objects may be placed on outside patio walls or hung from balconies or decks. Plants on decks must have collecting dish under them to stop seepage. And to avoid damage to the decks, plants must be elevated on a plant stand.
8. No seed bird feeders are permitted.
9. Aluminum foil may not be placed in unit windows.
10. Window coverings must be white to the common area view.
11. No furniture or equipment may be moved from pools, clubhouses or other common areas.
12. Tradesmen are not allowed in the complex between 7 p.m.-7 a.m. Monday through Saturday. None on Sundays, except for emergencies.
13. Plantings on the exterior of common area walls/adjacent to patios, must be trimmed down to the same height of the wall. Common area plantings are not permitted to be used as a concealment for patios. Common area plantings are

maintained by the HOA landscaper. Owners are not to request the HOA landscaper for any deviation from the rules.

14. Interior Patios- Pursuant to the CC&R's Section 7.2 – a architectural application is required and prior written approval from the Board, prior to any landscape installation/modification within the exclusive use common area patios of the units. Interior patio plantings, shrubs/trees, must be kept neat and clean and not be allowed to grow higher than 1' (1-foot) below the balcony above. Shrubbery and trees must not be allowed to grow to touch the roof lines and/or balconies/buildings.

Swimming Pools & Spas

1. Hours of operation are from 8 a.m. to 10 p.m.
2. Pools and spas may be used by owners, tenants and invited guests only.
3. Gates will be kept locked at all times. No propping open of gates is permitted.
4. Children under 14 must be accompanied by an adult while within the pool and spa areas.
5. Children who are not toilet-trained are not allowed in pools or spas. City ordinance prohibits children wearing Swimmers to use a public pool.
6. No pets are permitted in pool and spa areas.
7. No food, bottles or glassware are permitted. No littering is permitted.
8. No rafts/floats are allowed in spas.
9. Rafts/floats are not allowed in pools if more than 10 persons are in the pool.
10. You may not reserve pool furniture by leaving belongings thereon when you leave.
11. Appropriate swimwear must be worn at all times.
12. No diving is permitted.
13. There is to be no tampering with pool or spa thermostats.

Clubhouse

1. Clubhouse may be reserved for social activities not more than 60 days in advance by individual owners on a first-come, first-served basis. Reservations will be accepted only if the maintenance fees, fine, and penalties for the unit are current and upon payment of a $100-per-day Rental FEE and $250-per-day Cleaning Deposit. Refundable in accordance with reservation set forth herein.
2. During holiday weekends, clubhouse may be reserved for only one day. If more than one day is desired, it may be requested no more than one week in advance.
3. All social events must be ended by 10 p.m.
4. Private meetings with 25 or less may be permitted with no deposit. Purpose of and scheduling of needs to be reported to management.

Tennis Courts

1. Hours of operation are from 8 a.m. to 10 p.m. November through April, and 7 a.m. to 10 p.m. May through October.
2. Play is limited to homeowners, tenants, and invited, accompanied guests only.
3. Use is limited to 90 minutes if others are waiting.
4. Children under 12 must be accompanied by an adult.
5. No pets are permitted on courts.
6. No glassware, food, or bottles (other than plastic) are allowed on court areas. No littering is permitted.
7. Proper tennis attire will be worn. No black-soled shoes are permitted.
8. Lights must be turned off when not in use. Gates must be locked when you leave the tennis courts.
9. Tennis courts will be used for tennis-playing only. Pickle ball Courts are to be used for pickle ball only.

Fitness Room & Saunas

1. No children under 14 are permitted. Children from 14 to 18 must be accompanied by an adult.
2. No pets are permitted under any conditions.
3. No smoking, food, bottles (other than plastic), glassware are permitted.
4. All trash and litter must be cleaned up.
5. Lights must be turned off and doors locked when you leave.

Smoking

No Smoking is permitted in the Pool or Spa areas, Clubhouse or Billiard room, Fitness Room, or Laundry rooms. This includes e-cigarettes and Cannabis use.

Parking

1. Each unit is assigned a covered parking space. No parking in anyone's space is allowed without the unit owner's permission. Violators will be towed at the vehicle owner's expense.
2. Guest Parking is available along Via Carisma and San Jose Road.
3. No trailers, boats or vehicles may be parked within the complex except for loading/unloading, and then up to a maximum of 4 hours. After 4 hours, they are subject to towing at the owner's expense.
4. Overnight parking of occupied recreational vehicles is prohibited.
5. No vehicle maintenance is to be performed within the perimeter of the complex except for emergency service such as repairing a flat tire or recharging a battery.
6. Unlicensed and inoperative vehicles are prohibited and will be towed at the owner's expense.
7. No storage of any items except motor vehicles in the carport parking spaces. Items left are subject to removal and disposal.

Waste Disposal

1. The trash dumpsters shall be used for the disposal of normal household refuse only.
2. Food waste shall be placed in plastic trash bags.
3. All refuse, except recyclables, shall be placed in the dumpster itself, and shall not be left elsewhere in the trash enclosure, the common area, or in view of the common area.
4. Recyclable items should be placed in the blue recycling bins.
5. Cardboard boxes should be collapsed to minimize the space they take up in the recycling bins. Collapsed boxes too large for the bins should be cut up to fit in the bins or should be placed in the dumpster.
6. The following items must be disposed of off-site, not in the dumpster:

- Environmental waste, such as batteries, paint, chemicals, TVs, and computers (per state and local ordinance).
- Construction debris.
- Roof-top equipment, such as water heaters and air conditioning units.
- Excessive moving debris, including furniture, appliances, and mattresses.

7. It is each homeowner's responsibility to make their contractors, service personnel, and tenants aware of these policies, and homeowners shall be responsible for violations of these policies by their contractors, service personnel, and tenants.
8. All items to be disposed of must be placed either in a dumpster or in one of the blue recycling carts. Dumpsters and carts are conveniently located in six locations around the property.
9. Homeowners in violation of these rules will be personally responsible for the cost of removing any of the above-mentioned items and disposing of them properly.

All types of recyclable materials can be mixed together in the carts; there is no need to separate them. Large cardboard boxes must be collapsed and cut or folded to fit in the blue carts. If you leave them outside the carts, they may not be picked up. Alternatively, you can bundle them and bring them to the Palm Springs Disposal office at 4690 E. Mesquite Ave. (near Gene Autry Trail) during business hours.

Do not leave large items, such as furniture and appliances, outside the dumpsters; they will not be picked up, except by special arrangement with Palm Springs Disposal. See their website for information on disposal of hazardous waste, furniture, appliances, electronics, and other special services.

The franchised trash disposal service for the City of Palm Springs is Palm Springs Disposal (760-327-1351). Trash pickups are on Tuesday and Friday mornings, recycling on Wednesday only. Service on Tuesday is suspended after the season until the beginning of the next year's season.

Laundry Rooms

1. No garbage other than laundry room refuse is to be disposed of in laundry room containers.
2. Laundry room dryer filters must be cleaned after use.
3. Lights will be turned off and outside door locked, and windows closed when leaving the area.
4. Bicycles in storage must be labeled by Unit Number and removed upon sale of your unit. Bicycles stored are at your own risk and are the sole responsibility of the owner.

Rooftop Service & Maintenance

1. Prior to performing any roof top activity for any reason, the proposed activity must be reported to management.
2. Service and maintenance of rooftop equipment must be done in a manner that satisfies all applicable city and state building and safety codes.
3. All contractors and repair personnel shall be licensed and bonded.
4. All equipment, including, but not limited to, water heaters, heating and air conditioning units, and satellite dishes, shall be permanently labeled as to the unit number that it services. Such labeling shall be etched, engraved, or printed with an ink that will not fade or run.
5. It is each unit owner's responsibility to make their contractors aware of this rooftop service and maintenance policy, and any violations of the policy may result in a fine to the unit owner.

Satellite Dish Policy

Prior to any installation the owner must contact Management and gain permission to have a satellite dish installed per HOA policy.

While a dish may be installed with permission an “Architectural Variance Request” must be submitted for post approval by the board at the next monthly HOA meeting. A required refundable deposit of $350 to have a satellite dish installed.

1. The Owner assumes all responsibility for the satellite dish including installation, service, and removal. This includes any damage caused to the structure by the satellite dish from, installation/removal/service, windstorms, natural disasters and other acts of god.
2. Satellite dishes are not to be installed in any manner that is connected or penetrates into the roof, eves or any part of the structure.
3. Placement of the satellite dish must be as inconspicuous as practical.
4. Installation should be ideally on a weighted surface supplied by the provider.
5. All cable shall be placed to be as undetectable from a ground view as possible and in a compatible light color.
6. Any holes in the stucco or exterior walls shall be properly sealed around cables.
7. Satellite dishes must be permanently labeled as to the unit it belongs. Either etched, engraved or with an ink that will not fade or run. Unlabeled satellite dishes may be removed and/or discarded.
8. Upon sale of property or discontinuance of service the satellite dish must be removed. This includes all cable and hardware and the patching and painting of any
   holes in the structure in the common area view or on exterior structure. This by a licensed, bonded and approved contractor.
9. After removal and inspection the deposit may be refunded in 14 days.
10. All proposed projects must address the protection of the roof membrane. Any holes necessary to install equipment must be reported. Any damage to the integrity of the roof structure, whether or not approved by management, will be the responsibility of the unit owner.
11. All debris and old equipment from any rooftop project must be removed from the roof. All large debris must be disposed of offsite, not in our community trash.

Rules Applicable To Owners Only

1. “Short Term Rental Rule” - Owners may lease or rent their units for a term of not less than 30 days.
2. Should the unit be rented to a party or agent that party and agent is subject to the 30-day rule for owners. Both are subject to knowledge of the "Rules & Regulations."
3. Schedule of fines for violation of the “Short Rental Rule”, First Offense Certified Letter, Second Offense $1,000, Third Offense $5,000.00, Fourth Offense, legal action.
4. Owners must provide all renters and guests with a copy of these rules.
5. Homeowners' assessments are payable on the 1st of each month.
6. A 10% late charge will be applied if payment is not received by the 15th day of the month in which it is due, regardless of the date of mailing. Automatic payment option is available.
7. Interest will be applied at the end of the first month and each month thereafter at the rate of 12% per annum on all amounts unpaid.
8. Costs for filing liens, attorney's fees, foreclosure costs and other related charges will be borne by the homeowner.
9. Owner to supply management a copy of "Rental Agreement" and contact information.

Rules Applicable To Owners And Long-Term Renters Only

1. Each unit is to be used as a private residence only.
2. No exterior changes of any type may be made without the prior written consent of the Board of Directors.
3. No additional outdoor lights may be connected to the Association's meters.
4. Patios must be kept neat; trees, shrubbery and other lawn areas must be kept trimmed.
5. Trees and plants in patios may not grow higher than the balcony floor of the upstairs unit.
6. No planting is permitted in the common areas without prior written Board approval.
7. Only one (1) “for sale, lease or rent” sign, two-feet square with brown lettering on a beige background, may be displayed.
8. Sign must be posted within the unit's exclusive use area. No signs may be posted in the common areas.
9. Antennas may not be installed without the Board's advanced written approval, subject to acceptance of liability form.
10. All satellite dishes must have prior approval, subject to acceptance of liability form.
11. Gas and electric barbecues are permitted on patios and balconies. No charcoal barbecues are allowed.
12. Patios are not to be used for storage. Patios/decks may only be furnished by typical patio type furniture, i.e.: tables, chairs, lounges, umbrellas, barbecues, and other patio style furniture. Patios must be kept with a pleasant aesthetic view from the common area. This includes the view at the front entry.

Fine Procedures
Homeowners must be familiar with all Rules and Regulations as stated in the Covenants, Conditions and Restrictions (CC&R's) and the By-laws of this rule book. Homeowners are responsible to ensure that they, their tenants and guests are fully aware of these rules and regulations and must provide all tenants and guests with copies thereof.

Homeowners are financially responsible for the violation of these rules by their tenants and guests. All fines will be assessed against the homeowner. If any damage is done to the common area, furniture, clubhouse, or other appurtenances, by any homeowner, tenant or guest, the homeowner shall be financially responsible for such damage.

The Board of Directors has full authority to levy any of the warnings and/or fines after a legally scheduled hearing.

Any penalties may be appealed to the Board of Directors at their next regular meeting following the date of the violation. If not appealed, fines are to be paid with the next monthly homeowner dues payment.

Schedule Of Fines

- **FIRST OFFENSE:** Warning letter sent certified with specified time for correction. If not corrected within time limitation, violation is considered as a second offense.
- **SECOND OFFENSE:** After 30 days the homeowner will be fined and billed $250.00 for the violation. And if any costs or expenses are incurred by the Association in regard to processing and/or collecting fines resulting from violations of the Association's Rules & Regulations or Governing Documents, such amounts will be assessed against the homeowner.
- **THIRD OFFENSE:** After 60 days the homeowner will be fined and billed an additional fine up to $500.00. And if any costs or expenses are incurred by the Association in regard to processing and/or collecting fines resulting from violations of the Association's Rules & Regulations or Governing Documents, such amounts will be assessed against the homeowner.
- **FOURTH OFFENSE:** A fine of up to $500.00 will be applied for each week the violation is not corrected in addition to the above fines.

The above enforcement fines apply to any future adopted Rules and Regulations as well as any CC&R's infractions.

ARCHITECTURAL ISSUES

In general, owners, renters, and guests are prohibited from making any alterations, additions, or modifications to the exterior portion of any unit or the common area without prior written Board approval. To obtain approval, complete the Architectural Variance Request Form below and submit it to Management.

Architectural Variance Request Form (PDF)
Architecture and Design Control (from Covenants, Conditions & Restrictions) (PDF)

Pre-Approved Architectural Items

The following items have been pre-approved for installation without prior Board approval. However, door and window replacement still require submission of the Architectural Variance Request Form to notify Management.

For installation, you may hire your own licensed contractor or one recommended by Management. In some cases, a city permit may be required for installation.

Front Doors

Classic) models FC-25 (glass design at top) or FC-60 (no glass)
(FC-60).

Painting of Front Doors may be permitted to an approved color. This process requires an “Architectural Variance’ and approved by the “Architectural Committee”. Specific color available from the management company.

Screen Doors

Brand/Model: Gatehouse Gibraltar 36-inch Black Steel Security Screen Door, Item #62469

Brand/Model: SafeHome 36-inch Black Steel Security Screen Door, Item #546968 (and several more decorative models).
*All available at local hardware stores.

Windows

There are sliding windows in bedrooms, dining room, and kitchen. Note that the City of Palm Springs no longer allows aluminum-frame windows.

Brand/model: Amsco horizontal-sliding, vinyl, retrofit frame with lifetime bronze finish, and dual-glazed, clear, low-E glass.

Available at: California Window & Door, Palm Desert; phone 760-844-2786 (Craig) or 760-773-1053 (main number).

Balcony Screening

Outdoor sunscreen or shade fabric can be hung from the balcony ceiling to screen out intense morning or afternoon sun. Approved colors are tan or beige and dark or dull green.

CCCE Water Softener Equipment Specifications & Installation Requirements
As approved by CCCE Board of Directors May & June 2022

This guide is designed to be used by both <u>CCCE Owners</u> and the <u>CCCE Community Manager</u>:

- **OWNERS**
  Please use this guide to understand the requirements, specifications and costs involved in installing a home water softener BEFORE submitting an architectural request form to management and BEFORE committing to a vendor to install a water softener.

- **COMMUNITY MANAGER**
  The HOA Board of Directors, acting as the Architectural Control Committee, has provided these guidelines in an effort to streamline owner requests for this specific item, in that the Community Manager may provide the HOA Board of Directors written approval should all the requirements noted herein be met by the owner. The HOA Board of Directors will then ratify the approval in their next open meeting. Owners (not renters) must submit an architectural request form with sufficient information for you to confirm that all the equipment and installation requirements meet the standards outlined in this guide PRIOR to having any installation proceed. If there is any question to the correctness or validity of an owner's request, please contact the HOA board president or member of the CCCE architectural committee before proceeding further.

Architectural Request Form (REQUIRED)

Submitting an architectural request form to the community manager, and receiving written approval back, will be required before any installation can move forward. In order to be considered and avoid delays, an owner's architectural request should include all pertinent details of the equipment and installation plan, including a photo of the intended exterior location ***and*** landscape/foliage concealment plan from our landscape vendor. The form is available on the homeowner portal, the CCCE website, or by calling the community manager directly.

Risk & Responsibility

The owner is fully responsible and accepts all risks and associated costs related to the purchase of equipment, installation, and ongoing maintenance of a water softener. Only the type of water softener and installation outlined in this brochure are allowable at CCCE without further approval of the community manager under the direction of the CCCE board of directors. If any damage is incurred to a main water line, building exterior or landscaping/irrigation (otherwise the responsibility of the HOA) during the installation or removal of a water softener, the owner is responsible for rectifying the damage to a fully operational state under the direction of the community manager and accepts all costs related to the repairs.

Equipment Specifications

Only the specific model and equipment outlined below and in the attached photographs are allowable for installation by owners at CCCE. Careful considerations by the CCCE board of directors that lead to this single limited option included the model's ability for exterior placement, non-electric operation, small/compact size and ability to maintain equipment from local vendors. Equipment must meet the specifications below and/or as seen in the illustrations attached:

- **Kinetico model <u>2040s</u> non-electric twin tank water conditioning system**
  (or a Kinetico model that meets all the same specifications if a newer model replaces the 2040s)
- Twin cylinder tanks w/attachments that do not exceed **24"** high
- A single brine tank that does not exceed **20"** high

Installation Requirements

- Installation must be done by a licensed plumber under the direction of a local authorized Kinetico dealer where the unit was purchased. Owners are not allowed to purchase a water softener from a non-authorized source and complete the installation process on their own.
- Equipment must be installed as close as possible to the exterior water line shut off valves associated with the owner's unit and as near to the exterior building wall as possible – all under the direct supervision of the experienced local Kinetico dealer's representative and licensed plumber.
- Water softener must be able to drain directly into a sewer drain clean-out opening on the exterior of the building. The homeowner, or authorized Kinetico dealer if amenable, is solely responsible for finding the nearest sewer drain clean-out opening, and not the CCCE HOA. The authorized Kinetico dealer cannot/will not install a water softener that doesn't drain correctly into a sewer drain clean-out opening. The drain hose or pipe must not be visible and be trenched/concealed under landscaping. If a sewer drain clean-out opening is not available in close proximity, installation of a water softener will not be allowed. The CCCE HOA does not guarantee the availability of a sewer drain clean-out opening in the area where a water softener may be desired and is not responsible for providing one. A homeowner is not allowed to install any type of sewer drain clean-out opening in order to accommodate a water softener.

Best Effort Aesthetic Equipment Concealment Requirements

PRIOR TO SUBMITTING AN ARCHITECTURAL REQUEST:

- The owner desiring to install a water softener must contact CCCE's landscape/gardener vendor *(Chris Martinez, Quality Green Landscaping at the time this guide was created)* and seek direction on what type of foliage or reasonable landscape modification could be completed that would help conceal the installed equipment from view – recognizing that there may be easy options to conceal the equipment better, or that further concealment may not be necessary if the foliage in the area is already sufficient.
- The owner must submit the plan or statement provided only by CCCE's landscape vendor as part of the architectural request form in order to be evaluated by management.
- The full cost of any added or modified foliage/landscape concealment effort will be at the owner's expense – billed directly by the landscape vendor to the owner.
- The choice of new foliage planted must be approved by the landscape vendor in accordance with CCCE landscape standards already established.
- New foliage planted must be properly irrigated as determined by the landscape vendor.
- The installation of fencing or other concealment methods will not be allowed.

Kinetico 2040s

OVERDRIVE ENHANCED

Non-Electric, High Performance Water Conditioning System

Kinetico®
home water systems

Conditioned Water 24 Hours a Day, Every Day

Simple, Reliable and Economical Operation

Twin Tank Design

Certified Performance

Installation and Service by Trained Water Treatment Professionals

Regeneration requires only:
• 7 gallons of water • 11 minutes • 1 lb. of regenerant

What Makes The Kinetico Overdrive® Enhanced 2040s Different?

1. **Non-Electric Operation.** Reliable. No timers or computers to set, adjust, repair or replace.
2. **Metered, Demand Service.** Unlimited supply of clean, soft water. Eliminates guesswork, water and regenerant waste, and hard water breakthrough.
3. **Twin Tank System.** Unlimited supply of clean, conditioned water. Enables system to regenerate with clean, conditioned water.
4. **Overdrive Enhanced.** All tanks are in service simultaneously. Increases performance, efficiency, flow rate and media life.
5. **High Flow Rate.** System keeps up with the conditioned water needs of today's demanding households.
6. **Large Porting Size.** Perfectly suited for larger plumbing found in many homes. Up to 1 1/2 inch.
7. **Efficient Hardness Removal.** Assures consistent and continuous clean, soft water. Saves money on soaps and cleaners. Protects plumbing and appliances.
8. **High Efficiency, Packed Resin Bed.** More efficient hardness removal. Conserves regenerant and water. Increases performance.
9. **Efficient Use of Water and Regenerant.** Low water consumption. Less money spent on regenerant.
10. **Corrosion-Resistant Valve and Tanks.** Long lasting. Can endure harsh environments.
11. **Soft Water, Countercurrent Regeneration.** Increases product efficiency and water quality.
12. **Automatic Operation.** Just add regenerant.
13. **Outstanding Warranty.** Dependability, peace of mind.

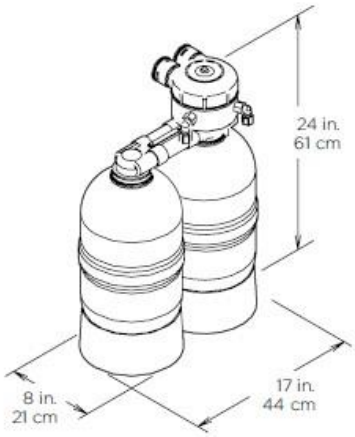

Brine Tank Options:

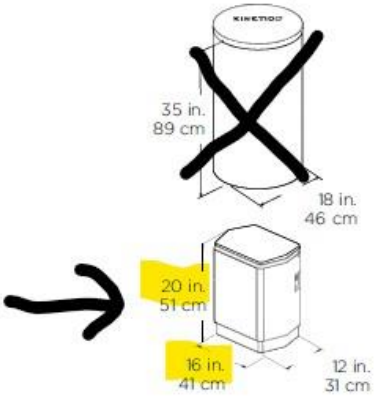

Photos of correct 2040s system with allowable 16x20 brine tank provided by Kinetico:

MACH 2040S

The Kinetico Mach 2040s OD is an independently certified, high performing, non-electric water softener.

<u>Photo displaying correct system & correct installation at CCCE June 2022</u>:

**Guide created by Michael Rossman, CCCE HOA President, 6-27-22 (FINAL)*
**Requirements & specifications approved by the CCCE HOA Board of Directors in May/June 2022.*

Kinetico water systems

Kinetico 2040s OD

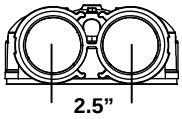

System Components

Media Vessel (qty) Size ..... (2) 8 x 17”
Media Vessel Construction ..... Fiberglass Wrapped Engineered Plastic
Empty Bed Volume ..... 0.40 ft^3
Media Type ..... Fine Mesh Cation Resin
Media Volume ..... 0.40 ft^3
Bed Depth ..... Packed
Free Board ..... None
Riser Tube ..... 1” ABS
Distributor Upper ..... 0.009” Slots, Engineered Plastic Basket
Lower ..... 0.009” Slots, Stainless Steel Flat Plate
Under bedding ..... None
Regeneration Control ..... Non-electric Use Meter
Regeneration Type ..... Countercurrent
Meter Type ..... .0.3 - 25.00 gpm Polypropylene Turbine

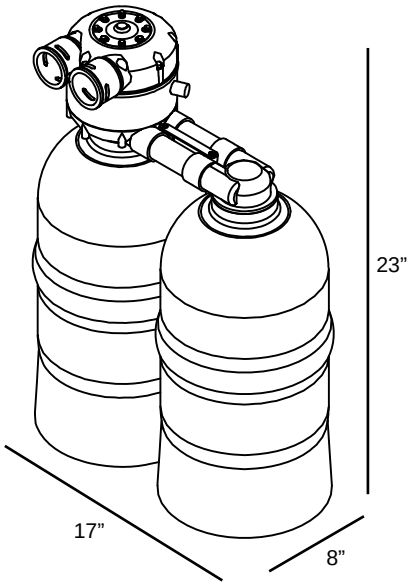

Inlet Water Quality

Pressure Range ..... 15 – 125 psi Dynamic Pressure
Temperature Range ..... 35 – 120° F
pH Range ..... 5 – 10 SU
Free Chlorine Cl_2 (Max.) ..... 2.0 mg/L
Hardness as $CaCO_3$ (Max.) ..... 44 gpg

Operating Specs

Flow Range (15 / 30 psig) ..... 11.0 - 15.0 gpm
Flow Configuration ..... Overdrive
Dimensions (width x depth x height) ..... 17 x 8 x 23”
Weight (Operating / Shipping) ..... 120 / 90 lbs.

Connections

Inlet / Outlet Connections ..... Custom Adapter and Bracket
Drain Connection ..... 0.5” Tube
Brine Line Connection ..... .0.375” Tube
Power ..... None

System Part Numbers

Kinetico 2040s OD, 18 x 35 brine tank 11125
Kinetico 2040s OD, 12 x 16 x 20 brine tank 11120
Kinetico 2040s OD, K-Spray 11127
Kinetico 2040s OD, no brine tank 11121

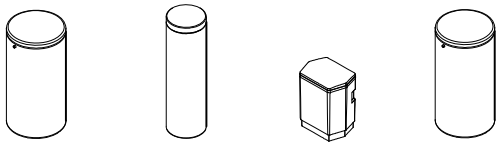

Brine Tank Options

Tank Description	K-Spray	12 x 40	12 x 16 x 20	18 x 35
Brine Tank Part Number	9763A	1479B	7202	7938
Tank Height	35”	40”	20”	35”
Tank Footprint	18” DIA	12” DIA	12 x 16”	18” DIA
Material	HDPE	HDPE	HDPE	HDPE
Salt Capacity	200 lbs.	100 lbs.	50 lbs.	250 lbs

Regeneration Specifications

Regeneration Volume ..... 7 gallons
Regeneration Time ..... 11 minutes
Backwash Flow Control ..... 1.40 gpm
Brine Refill Flow Control ..... 0.40 gpm

Setting	Capacity	Efficiency	Dosing	Meter Disc
1.0 lbs.	5,222 grains	5,222 gr./lb.	2.5 lbs./ft^3	

Disc Selection

(Compensated Hardness*)

	1	2	3	4	5	6	7	8
	7	15	21	27	31	36	40	44
Gallons/Regeneration:	657	329	219	164	131	109	94	82

*Compensated hardness in gpg = Hardness + (3 x Fe in mg/L)

revision date: June 2008

Kinetico 2040s OD

Operating Profile

Softener shall remove hardness to less than 1/2 gpg when operated in accordance with the operating instructions. The system shall include two tanks. This duplex configuration shall operate with both tanks on-line during service. During regeneration cycles, one tank shall provide water to service and to the regenerating tank. A water meter shall initiate system regeneration. The water meter shall measure the processed volume and be adjustable. Service flow shall be upflow and regeneration flow shall be downflow.

Regeneration Control Valve

The regeneration control valve shall be top mounted (top of media tank), and manufactured from non-corrosive materials. Control valve shall not weigh more than four pounds. Control valve shall provide service and regeneration control for two media tanks. Inlet and outlet ports shall accept a quick connect, double O-ring sealed adapter. Interconnection between tanks shall be made through the regeneration valve with a quick connect adapter. Control valve shall operate using a minimum inlet pressure of 15 psi. Pressure shall be used to drive all valve functions. No electric hook-up shall be required. Control valve shall incorporate four operational cycles including; service, brine draw, slow rinse, and a combined fast rinse and brine refill. Service cycle shall operate in an upflow direction. The brine cycle shall flow downflow, opposite the service flow, providing a countercurrent regeneration. Control valve shall contain a fixed orifice eductor nozzle and self-adjusting backwash flow control. The control valve will prevent the by-pass of hard water to service during the regeneration cycle.

Media Tanks

The tanks shall be designed for a maximum working pressure of 125 psi and hydrostatically tested at 300 psi. Tanks shall be made of engineered plastic with a 2.5 in. threaded top opening. Each tank shall be NSF approved. Upper distribution system shall be of a slot design. Lower distribution system shall be of a flat plate design. Distributors will provide even flow of regeneration water and the collection of processed water.

Conditioning Media

Each softener shall include fine mesh cation resin having a minimum exchange capacity of 40,000 grains/ft^3 when regenerated with 15.0 lbs/ft^3. The media shall be solid, of a proper particle size and shall contain no plates, shells, agglomerates or other shapes, which might interfere with the normal function of the water softener.

Brine System

A combination salt storage and brine production tank shall be manufactured of corrosion resistant, plastic. The brine tank shall have a chamber to house the brine valve assembly. The brine float assembly shall allow for adjustable salt settings and shall provide for a shutoff to the brine refill. The brine tank shall include a safety overflow connection to be plumbed to a suitable drain.

The Association is responsible for the common area water lines and drain lines in the outside walls and the common walls between the units and up to and excluding the angle stops shut-off valves, shower/tub valves and stems, drain lines and water lines in the walls within an owner's unit, which services that unit, belonging to the homeowner. The pressure regulator belongs to the homeowner.

The common electrical includes wiring up to but excluding the interior breaker box. The homeowner is responsible for the breaker box and electrical from the box.

Each homeowner is responsible for their unit's exterior water valve, water faucet, water heater, airconditioner,and furnace. Homeowner responsibility includes leaks found in the air
conditioning unit itself and ductwork.

The Association is not responsible for the protection/repair or replacement of screen, glass doors, windows, entry doors and hardware thereto, outside light fixturesor wrought iron gates on the patios. These items are, of course governed by the architectural standards.

3.(a) Adopted November 1997
Owners shall be liable for damage to the Common Area or adjacent units if such damage is caused by such Member's negligence or willful misconduct. Such costs shall become a lien upon the Owner' Unit and may be collected in the same manner as regular assessments, through the foreclosure as set forth in Article III of the CC&R's.

It shall be the responsibility of the individual Owner to turn off their water shut-off valves during any period of time in which the Owner or his tenants or guests are not residing in the Unit for a time period of seven (7) consecutive days or more. In the event a water pipe break or otherwise causes damage to the Common Area or another Owner's Unit(s) as a result of failing to shut off the water valve, then the Owner whose unit is serviced by said water valve shall be liable for the cost of repair of the Common Area (including the water valve). The cost of repair shall be imposed as a special assessment against said owner which may become alien against the Owner's Unit as set forth in Article III of the CC&R's.

Insurance
CC&R's Article 8.9 Individual Insurance.
An owner should separately insure real and personal property and shall obtain and maintain personal liability and property damage liability insurance for the unit.

These Rules and Regulations of Estados HOA, Inc. AKA Canyon Country Club Estados Homeowners Association were amended and approved by the board of Directors on August 12, 2022.

ARCHITECTURAL VARIANCE REQUEST

ESTADOS HOMEOWNERS ASSOCIATION, INC.
c/o West Coast Community Management
Mail: 75-161 Sego Lane, F-13
Palm Desert, CA 92211
(760) 766-7700
Jhansen@wccmanagement.com

HOMEOWNER:
UNIT ADDRESS:
MAILING ADDRESS:
EMAIL ADDRESS:
HOME PHONE:
MOBILE PHONE:

VARIANCE REQUEST:

We, the undersigned owners, request your approval of the modification(s) proposed above. Attached are drawings / photos of the work to be done; types of materials to be used are indicated on the drawings. We understand that building permits for home improvements may be required by the City of Palm Springs, and that the cost of such permits and the responsibility of obtaining permits and subsequent inspection will be borne by us.

We understand and agree that any changes in the attached plans must be approved, in advance, by the Architectural Committee, even is such changes are required by the City of Palm Springs or any other governmental authority. We further understand and agree that if the modifications are not completed in accordance with the approved plans and specifications, then the Estados Homeowners Association, Inc. and the Architectural Committee will treat the entire modification as having been completed without approval and in violation of the Association's CC&R's.

We acknowledge that all approved changes in the original design will be at our expense, that any damage to or relocation of existing sprinkler systems, underground utilities, building structure and exterior landscaping or other damage resulting from construction of these permitted improvements will be at our expense; and that maintenance of the permitted improvements will be at our expense.

All Common areas are to be cleaned at the end of each workday.

Signature of Owner(s) Date

ARCHITECTURAL COMMITTEE

The above request has been reviewed by the Architectural Committee and has been:

APPROVED ☐ REJECTED ☐ PENDING INFORMATION ☐

Signature of Architectural Chairman Date