Hoffman Installation

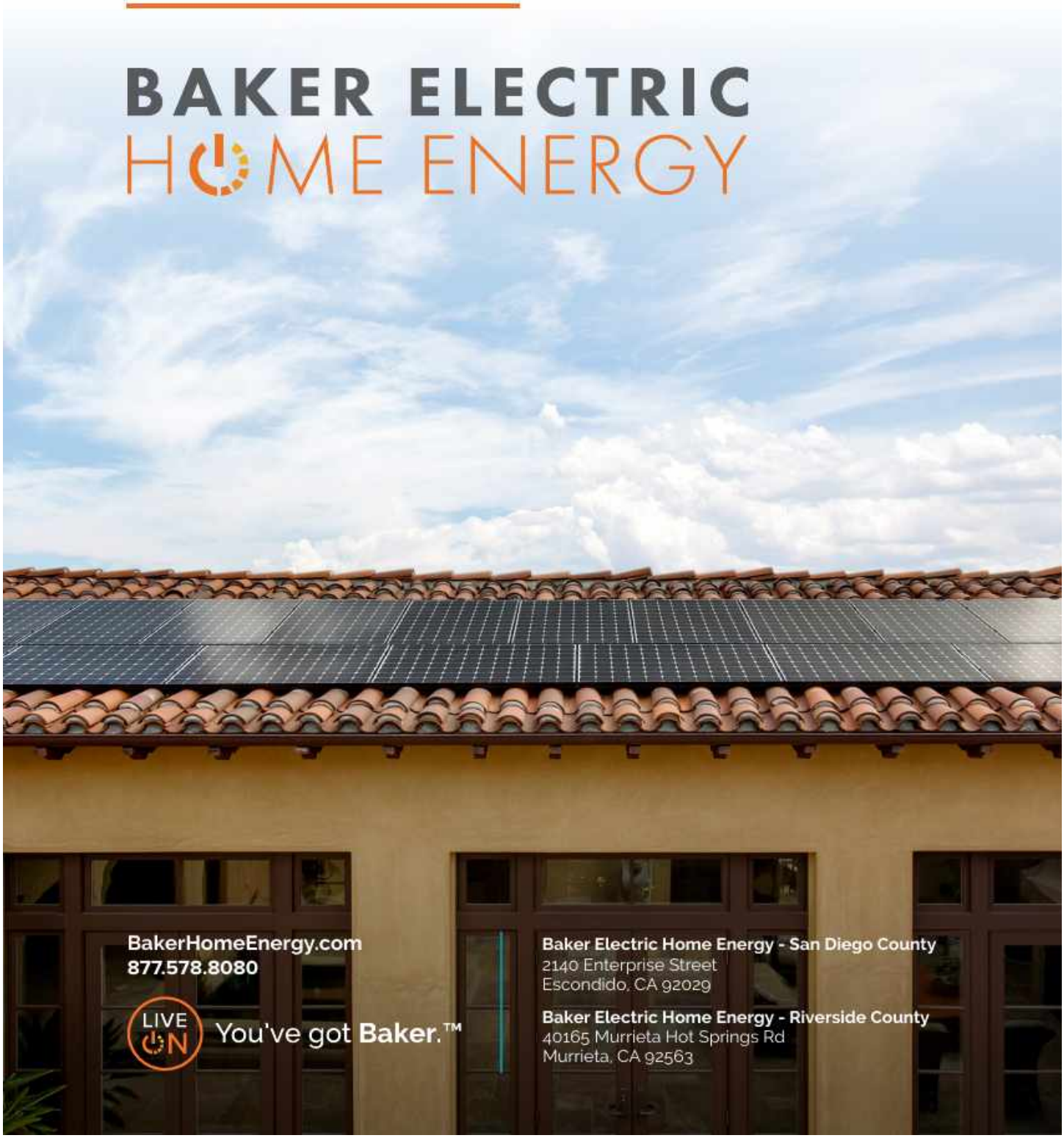

BAKER ELECTRIC
HOME ENERGY

Dear Hoffman Family,

Your confidence in Baker Electric Home Energy means a great deal to us. Our goal is to ensure your experience with our Baker staff and your new solar system exceeds your expectations now and into the future.

Baker Electric Home Energy is a member of the Baker family of businesses and is built on the success of our electrical contracting company which has met the needs of homeowners and businesses in Southern California since 1938. We are dedicated to an everyday commitment to deliver exceptional customer service. Should you have any questions or comments regarding your installation or system performance, please don't hesitate to contact us at 877.578-8080.

In closing, our best advocates are customers, just like you. By referring friends and family to Baker Electric Home Energy, you can earn a $250 Visa gift card once their installation is complete. You also have the option to donate that money to one of our four partner charities. For more information on the Baker Way Bonus Program, go to www.BakerHomeEnergy.com/referrals

Thank you for your business. You're in good hands!

Sincerely,

Ted Baker
CEO
Baker Electric, Inc.

How Solar Works

BAKER ELECTRIC HOME ENERGY

Your Baker Electric Home Energy solar system is engineered for optimal energy production. Simple and reliable, our installation comes with a 10 year warranty on the entire system and up to 25 years on the panels.

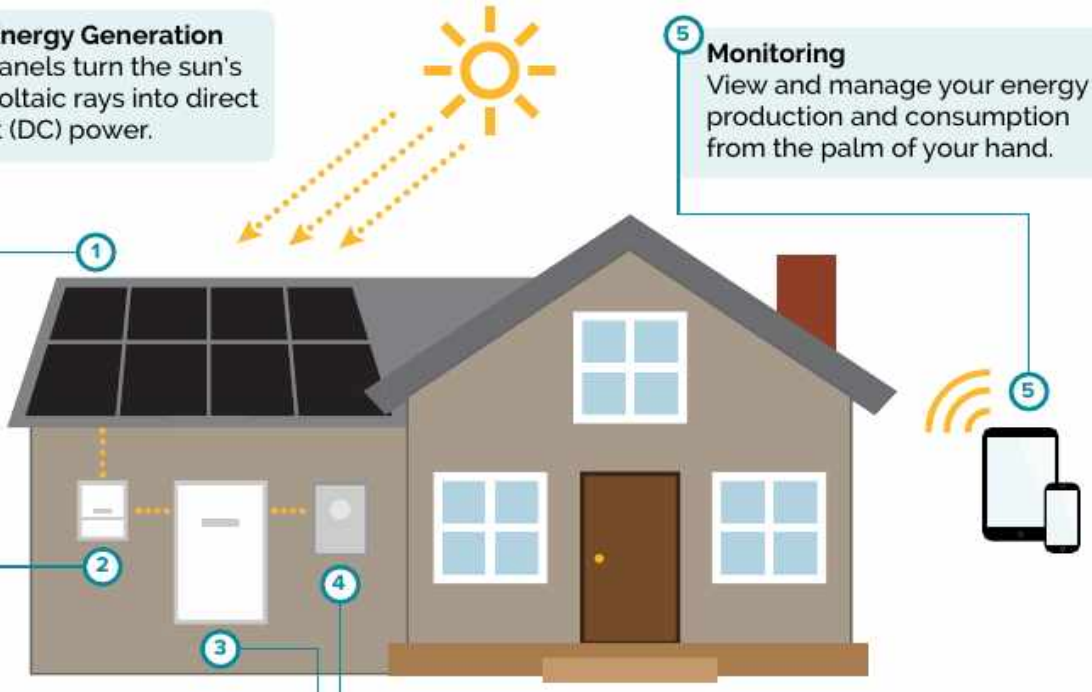

1 **Solar Energy Generation**
Solar Panels turn the sun's photovoltaic rays into direct current (DC) power.

5 **Monitoring**
View and manage your energy production and consumption from the palm of your hand.

2 **Energy Conversion**
The inverter converts the DC power into alternating current (AC), which is the type of power your home can utilize.

3 **Energy Storage (Optional)**
If you purchased a home battery, your excess power is stored for you to use whenever you need it.

4 **Net Metering**
Power goes into your main panel for home use, and all excess energy not used or stored goes back to the grid.

DID YOU KNOW?

Both state and federal tax incentives can substantially reduce the cost of your solar system. Ask about the Investment Tax Credit (ITC) and the Self-Generation Incentive Program (SGIP).

© 2018 Baker Electric Home Energy | CA license # 858088 Baker Electric Home Energy is a trademark of Baker Electric, Inc. and NB Baker Electric, Inc. DBA Baker Electric Home Energy.

Smart METER

How to read your smart electric meter for net metering customers

Reading your new smart electric meter is easy. The meter scrolls through several different displays that will show your kilowatt-hour (kWh) usage, date, time, and other system and diagnostic information. Since you have a photovoltaic (PV) system, your level (amount) of energy consumption is shown on your meter by bars or a 'pulse' running along the bottom of the display, right below the digital readout.

Scrolling Displays

Look at the top left-hand corner. Most of the scrolling digital displays are identified by a number in this corner. This number represents what type of data is being shown:

- "01" = Date. Shown as month/date/year. For example, March 4, 2010 would display as 03.04.10.

- "02" = Time. Shown in "military" or 24-hour time and includes seconds. For example, if it's 7:17 pm and 17 seconds, the display will be 19:17:17.

- "10" = Current meter read. Net = Delivered - Received.

- "del" = Energy delivered from the SDG&E grid to the customer.

- "rec" = Energy received from the customer to the SDG&E grid.

There is other information that scrolls through the display sequence providing valuable system information to SDG&E®.

Smart METER

Reading Your Energy Usage

Using our sample display, the initial NET meter read is 001406. To find out how much energy you use in a given time, subtract this first reading from a second reading taken at a later date. For instance, if you go back to your meter later and it reads 001940, then you have used 534 kWh for that time period (001940 - 001406 = 534).

Your meter will not show the total amount of energy being produced by your PV system, but will show how much energy has flowed back onto the grid. You can determine this by reading the data on the "rec" display as given in the example.

Visit *sdge.com/nem* for more information about our solar PV system requirements.

Detail of kWh Display

A kilowatt-hour (kWh) is 1,000 watts of power used for one hour. For example, when you use a 1000 watt (one-kilowatt) appliance for one hour, you've used one kWh and your meter read display will show an increase in consumption of one. If your generation system is providing power to the grid, the net values will be decreased by 1 kWh for every 1,000 watts of received power.

The "rotating disk" has been replaced with a series of symbols that will show the direction of energy flow.

Delivered - You're using energy from the grid

Received - Your meter is running backwards and your system is putting energy back onto the utility grid.

SDGE

A Sempra Energy utility®

Here for you, every day.®

For more information about how to read your electric smart meter, visit **sdge.com/smartmeter**.

©2010 San Diego Gas & Electric Company. All copyright and trademark rights reserved. Printed on recycled paper with soy-based inks.

1080054-BT 110 5M

TESLA

POWERWALL

A SELF-POWERED HOME

Powerwall is a home battery that stores solar energy so you can use it on demand and self-power your home to reduce your reliance on grid electricity. In the event of a grid outage, Powerwall automatically provides backup power or easily integrates with solar to ensure your home is powered 24/7. With Powerwall, you are assured of energy security and a clean energy lifestyle.

In this Guide You'll Discover

- The Benefits Of Powerwall
- Installation Overview
- Next Steps

BENEFITS OF YOUR POWERWALL

Powerwall allows you to store 14 kWh of energy and use that energy to run your home with solar during the night and back up your home in the event of a power outage. Powerwall is compact, safe and includes a built-in battery inverter, which provides easier integration and over-the-air updates for new features and functions.

Self-Powered Home

Use solar and Powerwall to reduce reliance on the grid and run your home off solar day and night

Backup Power

Protect your home from a power outage with seamless and reliable backup power

Energy Savings

Reduce your electricity bill, if your utility offers a time-of-use rate plan*

Home Energy Control

Manage and control your home energy use in real-time with the Tesla mobile app

*Available at a later date by an over-the-air update

SELF-POWER YOUR HOME WITH SOLAR AND POWERWALL

A self-powered home is one that runs off solar and Powerwall, which gives you the ability to own your energy and reduce your reliance on the grid. With Powerwall you can use more of your solar by storing the excess solar energy and using it at night, which roughly doubles the amount of solar energy that directly powers your home.

During a grid outage, by combining solar and Powerwall, you can extend your hours of backup power. Solar panels, when installed by themselves, are required to shut down during a power outage for grid safety. However, in combination with a Powerwall system, solar panels can continue to operate during a grid outage, and provide power to your home and also recharge the Powerwall in a longer duration blackout.

Tesla Mobile App

The Tesla mobile app allows you to have full visibility into your self-powered home. You can monitor your home solar generation, battery power flow, and household consumption in real-time from anywhere.

AUTOMATICALLY BACK UP YOUR HOME DURING AN OUTAGE

Secure your home from a power outage with reliable backup power. Powerwall is able to detect a grid outage, disconnect from the grid and bring power back to your home in a fraction of a second. That is over 100x faster than typical standby generators, and fast enough to keep your appliances running without interruption. You will not have to reset your clocks or your alarm.

Our goal is to provide backup power to your entire home. However, depending on the type of appliances at your home, we may recommend an essential load backup instead of whole home backup.

Whole Home Backup

Your entire home is backed up by our recommended number of Powerwalls. In some cases, an upgrade to your electrical panel may be needed and we will advise you if this is the case. You can add more Powerwalls to keep your house operational longer during an outage.

Essential Load Backup

If your electrical situation doesn't allow for a whole home backup, we can backup select essential loads. Since lights and outlets require less energy, a single Powerwall will typically be sufficient and a secondary electrical panel is usually required.

POWERWALL INSTALLATION

The Powerwall system consists of Powerwall and an additional supporting component called the Backup Gateway. Powerwall and the Gateway are connected to your home's main electrical panel. The Gateway has built-in intelligence and communications, which feeds into the Tesla app to give you full visibility into your home energy usage. Depending on your choice of whole home or partial home backup, your main electrical panel may need to be upgraded.

Whole Home Backup

Essential Load Backup

NEXT STEPS

Deposit

Place a $500 deposit to get started. We will contact you to learn more about your home energy needs and determine the right Powerwall system for you.

Home Energy Assessment

To prepare for your installation, we will assess the best location for Powerwall and determine the appropriate supporting hardware. This can either be done over the phone, where we will guide you to take specific photos of your home energy equipment or we can dispatch an electrician to conduct an in-person site visit.

Review your Powerwall agreement

Your agreement, sent via email, includes your final hardware and installation pricing for your Powerwall system. A Tesla product specialist will call you to answer any questions and walk you through the pricing details. You can also reach us at 725.333.7731. An email approval is all we need to move forward with your installation.

Schedule your installation

After you approve your agreement, a specialist will reach out to determine the best time to deliver and install your system.

Installation

It takes less than a day to install Powerwall. You will need to be home to let the installation crew in and be available throughout the day. Your home will lose power for a minimum of four hours during the installation process. This should be one of the last times you have a power outage!

Download the app

Once the system is installed, you can download the Tesla mobile app to monitor your Powerwall and home energy use in real-time, anywhere.

Ongoing Support

Powerwall has a 10-year warranty. We are here to support you with any questions during that time. You can reach us at 877.798.3752.

TESLA

DocuSign Envelope ID: DE47A3A2-8350-4EBA-A55A-5DBC114BE26C

BAKER ELECTRIC
HOME ENERGY

SOLAR SYSTEM AGREEMENT

Customer Information:

Eric Hoffman
5725 Soledad Mountain Road
San Diego, CA 92037
United States

System Size: 5.6 kW

(16) LG LG 350N1C-V5 Solar Modules, (1)SolaredgeSE7600H-US000BNU4 Inverter(s), (16) Solaredge Optimizer(s),
SE GSM Monitoring
SE7600 - 25 YR Extended Warranty
Tesla Powerwall 2.0 Installation - Single Unit

Agreement valid fifteen (15) days after April 7, 2020

Sales Person Name: Andy Krals
Sales Person CSLB HIS License #: 92911BA
Sales Person Company Cell: +1 7604840169
Sales Person Company Email: akrals@bakerhomeenergy.com

OVER 80 YEARS
Of electrical contracting experience

AWARD-WINNING ETHICS
2017 BBB International Torch Award Winner

AWARD-WINNING SERVICE
2013-2016 winner of the Angie's List Super Service Award

AWARD-WINNING SAFETY
NECA's Safety Excellence and Zero Injury Awards

BAKER ELECTRIC
HOME ENERGY

SOLAR ENERGY SYSTEM DISCLOSURE DOCUMENT

Pursuant to Business and Professions Code section 7169 - This cover page was developed through coordination of the California Contractors State License Board and the California Public Utilities Commission - and needs to be displayed on the front page or cover page of every home energy contract.

The TOTAL COST for the solar energy system (including financing and energy / power cost if applicable) is: $31,999.00.

To make a complaint against a contractor who installs this system and/or the home improvement salesperson who sold this system, contact the Contractors State License Board (CSLB) through their website at www.cslb.ca.gov (search: "complaint form"), by telephone at 800-321-CSLB (2752), or by writing to P.O. Box 26000, Sacramento, CA 95826.

If the attached contract was not negotiated at the contractor's place of business, you have a Three-Day Right to Cancel the contract, pursuant to Business and Professions Code (BPC) section 7159, as noted below. For further details on canceling the contract, see the Notice of Cancellation, which must be included in your contract.

Three-Day Right to Cancel

You, the buyer, have the right to cancel this contract within three business days. You may cancel by e-mailing, mailing, faxing, or delivering a written notice to the contractor at the contractor's place of business by midnight of the third business day after you received a signed and dated copy of the contract that includes this notice. Include your name, your address, and the date you received the signed copy of the contract and this notice.

13L-6 (05/2018)

CA Contractor License No. 858088

BAKER ELECTRIC
HOME ENERGY

HOME IMPROVEMENT AGREEMENT – CASH PURCHASE RESIDENTIAL SOLAR SUPPLY AND INSTALL

Customer Information:	**Installation Location:**	**Utility Information:**	**Salesperson Information:**
Eric Hoffman 4152543742 eghoffman@hotmail.com	5725 Soledad Mountain Road San Diego, CA 92037 United States	SDG&E	Andy Krals
Estimated Year 1 Production:	**Utility Account No.:**	**Utility Meter No.:**	**Salesperson CSLB No.:**
9013.41kWh			92911BA

This Home Improvement Agreement ("**Agreement**") is entered into on 4/8/2020 ("**Agreement Date**") by NB Baker Electric, Inc., dba Baker Electric Home Energy ("**Baker**" or "**Contractor**") and the customer(s) listed above ("**Customer**", "**You**", or "**Your**") for the sale and installation of the photovoltaic solar system described below ("**Project**" or "**System**") at the installation location listed above ("**Property**") upon the terms and conditions set forth in this Agreement, including all Exhibits attached hereto which are incorporated into this Agreement.

1. DESCRIPTION OF PROJECT AND DESCRIPTION OF SIGNIFICANT MATERIALS TO BE USED AND EQUIPMENT TO BE INSTALLED.

1.1 Sale and installation of the System at the Property, including the following parts and materials:

(16) LG LG 350N1C-V5 Solar Modules, (1)SolaredgeSE7600H-US000BNU4 Inverter(s), (16) Solaredge Optimizer(s)
SE GSM Monitoring
SE7600 - 25 YR Extended Warranty
Tesla Powerwall 2.0 Installation - Single Unit

1.2 Additional materials and extra work required:

2. CONTRACT PRICE.

2.1 The Contract Price for the Project is **$ 31,999.00.**

Solar and Associated Components: $ 19,399.00
Storage and Associated Components: $ 12,600.00

2.2 The Contract Price is subject to any change orders agreed to in writing by both You and Baker. The pricing in this Agreement is valid for fifteen (15) days from the Agreement Date. If You fail to sign and return this Agreement to Baker within such time period, Baker reserves the right to reject this Agreement unless You agree to Baker's then current pricing.

2.3 See following page for information on down payment and progress payment amounts and schedules. Note the Contract Price includes a cash discount. If You decide to finance the System or a portion thereof, the Contract Price may change.

3. INSTALLATION TIMELINE.

3.1 Baker will install the System within a reasonable amount of time after Baker signs this Agreement, but in no event later than six (6) months from the date of the Agreement. Baker will schedule the installation of Your System at a mutually convenient date and time.

3.2 Approximate Start Date: 30 days from the Agreement Date

3.3 Approximate Completion Date: 30-90 days from the Agreement Date

3.4 The above installation timeline is an estimate only and may be adjusted as provided in this Agreement, including for delays due to late payments or unforeseen conditions, or those delays caused by others. Baker will be deemed to have substantially commenced work under this Agreement on the date that an engineering site audit (Confirming Site Survey) has been completed for the Project.

4. NOTICES.

4.1 You may send notices, including Notices of Cancellation to Baker at 2120 Harmony Grove Road, Escondido, CA 92029.

5. DOWN PAYMENT AND SCHEDULE OF PROGRESS PAYMENTS.

5.1 **THE DOWN PAYMENT MAY NOT EXCEED $1,000 OR ten PERCENT OF THE CONTRACT PRICE, WHICHEVER IS LESS. The schedule of progress payments must specifically describe each phase of work, including the type and amount of work or services scheduled to be supplied in each phase, along with the amount of each proposed progress payment. IT IS AGAINST THE LAW FOR A CONTRACTOR TO COLLECT PAYMENT FOR WORK NOT YET COMPLETED, OR FOR MATERIALS NOT YET DELIVERED. HOWEVER, A CONTRACTOR MAY REQUIRE A DOWN PAYMENT.**

5.2 Payment schedule:

PAYMENT	TIMING	AMOUNT
Down Payment	Due at signing of Agreement *Substantial commencement of the Work may not begin until BAKER receives the Down Payment*	**From Customer:** **$ 1,000.00**
Progress Payment 1	Due at delivery of materials *Construction and installation may not begin until BAKER receives Payment 1*	**$ 21,699.30**
Progress Payment 2	Due at completion of installation work (installation work deemed complete when all photovoltaic equipment has been installed and a successful system test has been performed) *Inspection by City/County/Other Authority Having Jurisdiction may not be scheduled until BAKER receives Payment 2*	**$ 7,749.75**
Final Payment	Due at time utility grants permission to operate System *Final Payment must be received when BAKER makes the System operational*	**$ 1,549.95**
TOTAL		**$ 31,999.00**

5.3 BAKER DOES NOT ACCEPT CREDIT CARD PAYMENTS FOR PROGRESS PAYMENTS OR ADDITIONAL WORK. BAKER MAY, AT ITS SOLE OPTION, ACCEPT CREDIT CARD PAYMENTS FOR THE DOWN PAYMENT AND/OR FINAL PAYMENT.

6. ARBITRATION OF DISPUTES.

6.1 **ANY CONTROVERSY, DISPUTE, CLAIM, OR DISAGREEMENT BETWEEN THE PARTIES RELATING TO OR IN CONNECTION WITH THIS AGREEMENT AND/OR THE PROJECT ("DISPUTE") MUST BE RESOLVED EXCLUSIVELY BY BINDING ARBITRATION IN SAN DIEGO COUNTY, CALIFORNIA, WITH THE EXCEPTION OF CLAIMS BAKER VALUES AT $5,000 AND UNDER. AT BAKER'S SOLE AND EXCLUSIVE OPTION, THESE CLAIMS MAY BE LITIGATED IN SMALL CLAIMS COURT IN SAN DIEGO COUNTY, CALIFORNIA. THE ARBITRATION, INCLUDING SELECTION OF THE ARBITRATOR, WILL BE ADMINISTERED BY JAMS (Judicial Arbitration and Mediation Services, Inc), UNDER ITS STREAMLINED ARBITRATION RULES AND PROCEDURES ("RULES"), AND DECIDED BY A SINGLE NEUTRAL ARBITRATOR AGREED ON BY THE PARTIES WITHIN THIRTY (30) DAYS OF THE COMMENCEMENT OF THE ARBITRATION. EITHER PARTY MAY INITIATE THE ARBITRATION PROCESS BY FILING THE NECESSARY FORMS WITH JAMS. TO LEARN MORE ABOUT ARBITRATION, YOU CAN CALL ANY JAMS OFFICE OR REVIEW THE MATERIALS AT WWW.JAMSADR.COM.**

6.2 **If You initiate the arbitration, You will be required to pay $250 toward the filing fee and Baker will pay the remainder of the arbitration fees and costs. If Baker initiates the arbitration, Baker will pay all the arbitration fees and costs. Each party will be responsible for its own attorneys' fees and costs except that the prevailing party in any Dispute will be entitled to recover its attorneys' fees, costs, and expenses from the non-prevailing Party, in addition to any other appropriate relief.**

6.3 **Arbitration must be on an individual (not class or representative) basis and the arbitrator may not award relief for or against anyone who is not a party. This means You agree that neither You nor Baker may (a) join or consolidate claims in arbitration by or against any other parties, or (b) litigate in court or arbitrate any Dispute as a representative, member of a class, or in a private attorney general capacity. The arbitrator will have the authority to award any legal or equitable remedy or relief that a court could order or grant under this Agreement. However, the arbitrator may not change or alter the terms of this Agreement or make any award that would extend to any transaction other than Yours. All statutes of limitations that are applicable to any Dispute shall apply with respect to any arbitration between the parties. The arbitrator will issue a decision or award in writing, briefly stating the essential findings of fact and conclusions of law.**

6.4 **NOTICE: BY INITIALING IN THE SPACE BELOW YOU ARE AGREEING TO HAVE ANY DISPUTE ARISING OUT OF THE MATTERS INCLUDED IN THIS "ARBITRATION OF DISPUTES" PROVISION DECIDED BY NEUTRAL ARBITRATION AS PROVIDED BY CALIFORNIA LAW AND YOU ARE GIVING UP ANY RIGHTS YOU MIGHT POSSESS TO HAVE THE DISPUTE LITIGATED IN A COURT OR JURY TRIAL. BY INITIALING IN THE SPACE BELOW YOU ARE GIVING UP YOUR JUDICIAL RIGHTS TO DISCOVERY AND APPEAL, UNLESS THOSE RIGHTS ARE SPECIFICALLY INCLUDED IN THE "ARBITRATION OF DISPUTES" PROVISION. IF YOU REFUSE TO SUBMIT TO ARBITRATION AFTER AGREEING TO THIS PROVISION, YOU MAY BE COMPELLED TO ARBITRATE UNDER THE AUTHORITY OF THE BUSINESS AND PROFESSIONS CODE OR OTHER APPLICABLE LAWS. YOUR AGREEMENT TO THIS ARBITRATION PROVISION IS VOLUNTARY. WE HAVE READ AND UNDERSTAND THE FOREGOING AND AGREE TO SUBMIT DISPUTES ARISING OUT OF THE MATTERS INCLUDED IN THE "ARBITRATION OF DISPUTES" PROVISION TO NEUTRAL ARBITRATION. YOU ALSO ACKNOWLEDGE AND AGREE YOU ARE GIVING UP YOUR RIGHTS TO PARTICIPATE IN A CLASS ACTION OR SIMILAR PROCEEDING.**

DS

Customer Initials: EGH **Baker Initial:** _____

7. LIST OF DOCUMENTS TO BE INCORPORATED INTO THE AGREEMENT.

Exhibit 1 – General Terms and Conditions
Exhibit 2 – Limited Warranty and Production Guarantee
Exhibit 3 – Notice of Cancellation forms, 2 copies (required by law)
Exhibit 4 – Notice about Contractors' State License Board (required by law)
Exhibit 5 – Mechanics Lien Warning (required by law)
Exhibit 6 – Association Acknowledgement
Exhibit 7 – Form of Change Order (required by law)

8. THREE-DAY RIGHT TO CANCEL UNDER CALIFORNIA BUS & PROF CODE § 7159(e)(6)(B).

8.1 **You, the buyer, have the right to cancel this contract within three business days. You may cancel by e-mailing, mailing, faxing, or delivering a written notice to the contractor at the contractor's place of business by midnight of the third business day after you received a signed and dated copy of the contract that includes this notice. Include your name, your address, and the date you received the signed copy of the contract and this notice.**

8.2 **If you cancel, the contractor must return to you anything you paid within ten (10) days of receiving the notice of cancellation. For your part, you must make available to the contractor at your residence, in substantially as good condition as you received them, any goods delivered to you under this contract or sale. Or, you may, if you wish, comply with the contractor's instructions on how to return the goods at contractor's expense and risk. If you do make the goods available to contractor and contractor does not pick them up within twenty (20) days of the date of your notice of cancellation, you may keep them without any further obligation. If you fail to make the goods available to contractor, or if you agree to return the goods to contractor and fail to do so, then you remain liable for performance of all obligations under the contract.**

CA Contractor License No. 858088

BAKER ELECTRIC
HOME ENERGY

9. BOND NOTICE.

You have the right to require Baker to have a performance and payment bond. You must request any such bonds prior to commencement of any work under this Agreement and You will be solely responsible for the extra costs of obtaining such bonds.

10. SIGNATURES

Homeowner certifies that all information provided in this agreement is correct and the actions on the part of Homeowner necessary for the authorization, execution, delivery, and performance of Homeowner's obligations under this Agreement have been taken by Homeowner. Homeowner has all requisite legal right (a) to execute and deliver this Agreement, together with all other documents contemplated herein to be executed by Homeowner, and to consummate the transactions and perform the Obligations hereunder and thereunder, and (b) to own Homeowner's properties and assets. Baker may conclusively rely and shall be protected in acting upon any statement or information provided in this agreement (whether in its original or facsimile form) believed by Baker in good faith to be genuine and to have been signed or presented by the proper party or parties.

CUSTOMER:

DocuSigned by:

Signature: Eric G Hoffman
11C6BE89EA55417

Name: Eric Hoffman

Dated: 4/8/2020

Trust Name: ~~N/A~~

(If home is owned by a Trust enter in name of trust, if NOT enter "N/A")

Signature: _____

Name: _____

Dated: _____

Best Point of Contact: Eric Hoffman

Best Phone Number: 4152543742

Best Email: eghoffman@hotmail.com

CONTRACTOR:
NB Baker Electric Inc. dba Baker Electric Home Energy, a California corporation

Signature: _____

Name: _____

Title: _____

Dated: _____

_____

You are entitled to a completely filled in copy of this agreement, signed by both You and the Contractor, before any work may be started.

BAKER ELECTRIC
HOME ENERGY

EXHIBIT 1

GENERAL TERMS AND CONDITIONS

1. Pricing and Termination Rights.

1.1 Both parties will have the right to terminate this Agreement, without penalty or fee, if Baker determines after the confirming site audit of Your Property that it has misestimated any of: (a) the System size, (b) the System's total cost, or (c) the System's annual production. Such termination right will expire at the earlier of one (1) week prior to scheduled delivery of Your System materials, or one (1) week after Baker informs You in writing of the revised size, cost, or production estimate. Any changes to the System will be documented in a written amendment to this Agreement signed by both You and Baker. You authorize Baker to make corrections to the utility and paperwork to conform to this Agreement or any amendments to this Agreement signed by the parties.

1.2 If You are financing Your System, Baker's obligation to install the System is conditioned on Baker's confirmation that You have obtained financing for the System. Baker may terminate this Agreement without liability if, in its reasonable judgment, this condition will not be satisfied. You remain fully and primarily responsible for all payments due Baker under this Agreement regardless of whether You have separately contracted with a lender to pay all or any portion of the Contract Price, and regardless of whether Your lender intends to pay Baker directly or issue Baker joint checks.

1.3 You acknowledge that the System equipment and materials Baker will furnish and install are subject to cost increases. Baker will hold the Contract Price for three (3) months after the Agreement Date. If installation has not been completed after three (3) months for any reason and the cost of any System equipment or material rises due to circumstances beyond Baker's control, including, without limitation, market price fluctuation, then Baker will have the right to present You with a change order for the System equipment containing a new price. You will have the right to accept or reject this new price and get a refund of Your deposit, if any. If You do not accept the new price within seven (7) days, Baker will have the right to terminate this Agreement and issue You a full refund, at which time the parties shall have no further obligations to one another.

2. Permits.

Baker will obtain any necessary permits at Baker's cost. You will have the opportunity to review and approve the working plans for the Project. If you do not request any changes to the working plans in writing within three (3) business days of Your receipt of such plans, the working plans will be deemed accepted and Baker will obtain all permits based on the accepted plans. Baker is not responsible for delays in the work due to the actions of any permitting and regulatory agencies or their employees.

3. Note about Extra Work and Change Orders.

3.1 Extra work and change orders become part of the Agreement once the order is prepared in writing and signed by the parties prior to the commencement of any work covered by the new change order. The order must describe the scope of the extra work or change, the cost to be added or subtracted from the Agreement, and the effect the order will have on the schedule of progress payments.

3.2 You may not require Baker to perform extra or change-order work without providing written authorization prior to the commencement of work covered by the new change order. A change order is not enforceable against You unless the scope of the work, the amount to be added or subtracted from the Agreement, and the effect on the progress payments and the completion date are stated in a written document before commencement of the changed work.

3.3 Baker's failure to comply with the requirements of this paragraph does not preclude the recovery of compensation for work performed based on legal or equitable remedies designed to prevent unjust enrichment.

4. No Guarantee of Utility Bill Savings.

Pricing and savings vary based on location, system size, government rebates, post-solar kWh consumption and the time of day of that consumption, local utility rates, and the programming and discharge of incorporated energy storage devices. BAKER EXPRESSLY DOES NOT GUARANTEE ANY SAVINGS ON YOUR ELECTRICITY COSTS OR UTILITY BILLS. SAVINGS (IF ANY) WILL BE BASED UPON SYSTEM PRODUCTION AND YOUR FUTURE ENERGY USE.

Customer Initials: DS EGH

5. Energy Storage Devices (if incorporated into the System)

Energy storage devices ("Battery") incorporated into the System is intended to draw 100% of its charge from the solar array. The Battery can provide automatic backup power only to a selected set of essential circuits, and may not power your entire Property. Loads powered by the Battery, and the length of time the loads can be powered are dependent upon the charge of the Battery at the time of a grid outage, the maximum discharge rate of the inverter and the Battery discharge programmed settings as determined by the Homeowner. Homeowner will need to self-manage their

consumption patterns and load for both back-up and self-consumption applications.

6. Federal Renewable Energy Tax Credit and California Public Utility Commission Self-Generation Incentive Program Rebate.

REBATE AND/ OR INCENTIVE CALCULATIONS BAKER PROVIDES ARE ESTIMATES BASED ON CERTAIN ASSUMPTIONS. ANY ACTUAL REBATE OR INCENTIVE TO THE HOMEOWNER MAY VARY.

Baker agrees to provide Customer with reasonable support and documentation required in connection with obtaining the Federal Renewable Energy Tax Credit and the and California Public Utility Commission Self-Generation Incentive Program Rebate; provided, however, BAKER MAKES NO REPRESENTATION, WARRANTY, OR GUARANTEE THAT CUSTOMER WILL QUALIFY FOR THE FEDERAL RENEWABLE ENERGY TAX CREDIT, THE CALIFORNIA PUBLIC UTILITY COMMISSION SELF-GENERATION INCENTIVE PROGRAM REBATE, OR ANY OTHER FEDERAL OR STATE TAX CREDITS. Customer is advised to consult legal and accounting professionals with regards to the Federal Renewable Energy Tax Credit, the California Public Utility Commission Self-Generation Incentive Program Rebate and any other federal or state tax credits that may apply. Baker is not responsible for changes in incentives provided in The Energy Policy Act of 2005, The Energy Improvement Act of 2008, the California Public Utility Commission Self-Generation Incentive Program Rebate or other federal or state tax law.

DS

Customer Initials: EGH

7. Property Conditions.

You will be responsible for the structural integrity of the location where the System is installed, including structural or electrical modifications necessary to prepare Your Property for the System. You agree that Baker is not responsible for any known or unknown Property conditions. The Contract Price assumes that existing roofing materials and structural supports will be adequate to carry the load of all equipment to be installed and work to be done under this Agreement. If any modification of roofing materials and/or reinforcement of existing structural supports is required, Baker will be entitled to a change order providing an addition to the Contract Price and an extension of the completion date. Roofing leaks or compromised roof decking/materials that are not identified at Confirming Site Survey may become apparent during installation. If these conditions are discovered Baker will notify Customer immediately to address the issue.

8. Existing Electrical Conditions.

Baker is not responsible for and bears no liability for the malfunctioning of existing electrical equipment at the Property, including but not limited to the main electrical service panel, any major electrical devices, or any other fuses or similar devices. You will provide 110 volt electrical power from the existing distribution system on the Property for hand-held portable power tools at no cost to Baker.

9. Cost or Delay Due to Unforeseen Conditions.

Baker is not responsible for failures, delays, or expenses related to unanticipated, unusual, or unforeseen conditions at the Property arising out of conditions beyond Baker's reasonable control (all of which shall be considered "**Force Majeure Events**"). Performance times under this Agreement will be considered extended for a period of time equivalent to the time lost due to such Force Majeure Events. If Baker discovers unforeseen conditions requiring additional cost, then Baker will present such costs to You and get Your written approval before beginning or continuing performance. Failure to provide such approval in writing may result in Baker exercising its termination rights pursuant to this Agreement.

10. Property Access.

10.1 You hereby grant to Baker and its employees, agents, and contractors the right to reasonably access all of the Property as necessary between 7am and 6pm, Monday through Friday, for the purposes of (a) installing, constructing, operating, repairing, removing and replacing the System or making any additions to the System; (b) installing, using and maintaining electric lines and inverters and meters necessary to interconnect the System to Your existing electrical system at the Property and/or to the utility's electric distribution system; and (c) taking any other action reasonably necessary (including space needed for job trailer and temporary restroom facility) in connection with the construction, installation, operation, maintenance, removal, or repair of the System.

10.2 Baker may erect temporary facilities, including but not limited to storage sheds and portable toilets, on the Property. Such temporary buildings will remain the property of Baker and will be removed at Baker's expense after completion of the Project.

10.3 In the event Customer authorizes Baker's access to the Property through adjacent properties to complete the Project, Customer is required to obtain written permission from the owner(s) of the adjacent properties for such use, and Customer agrees to be solely responsible and to defend, indemnify, and hold Baker harmless from any and all forms of liability that may arise out of or relate to such use, including but not limited to encroachment or interference thereby upon the property, easements, or rights of any third parties.

11. Right to Monitor

Baker's Right to Monitor. Homeowner agrees to allow Baker the right to monitor Homeowner's electricity consumption and system production and grants permission to view and access such data. To improve our systems and services to you and facilitate the service of your system, Baker may collect certain data regarding the performance, usage of electricity as well as the operation and condition of your system. Baker may also receive information about you from other sources, such as equipment manufacturers and utility companies. Any data collected by Baker shall not be shared to third parties.

12. Title and Risk of Loss.

All materials delivered to the Property, regardless of whether actually incorporated into the Project, are and will remain the property of Baker until such time as Customer has paid Baker in full for such materials. Title to the System shall transfer to You after Baker completes installation of the System and You make final payment. Notwithstanding the foregoing, after delivery of the System equipment and materials to Your Property, other than damage directly resulting from Baker's negligent actions or omissions or willful misconduct, You bear risk of loss to the System for all causes of loss not covered by the Limited Warranty (as set forth in Exhibit 2). Baker retains all Baker-owned intellectual property rights on any of the equipment installed in Your System including, without limitation, patents, copyrights, trademarks, and any data generated by Baker's monitoring system.

13. Transfer of the Property.

You agree to give Baker notice of any transfer of the Property (including the System) within thirty (30) days of such transfer if You desire to transfer any rights and obligations under this Agreement and/or the Limited Warranty and Production Guarantee to the transferee. In the event of any transfer of the Property prior to full and final payment under this Agreement, You will remain liable for meeting all payment obligations under this Agreement.

14. Termination and Default.

Baker may, upon seven (7) days written notice to Customer, terminate this Agreement for any material or non-material breach, for any failure of Customer to agree to an appropriate change order, for any failure of Customer to pay Baker any amount due, for any bankruptcy or financial distress of Customer, or for any hindrance to Baker in the performance process.

15. Remedies Upon Customer's Breach.

Without limiting any of Baker's other rights and remedies, upon any breach by Customer, including any failure of Customer to pay Baker any amount due, Baker shall have the right, to the fullest extent of the law, to: (a) pursue a stop work order at the Property; (b) stop any more work from being done at the Property until the breach is cured and a bond is posted by the Customer for any amounts payable under this Agreement; (c) recover all amounts due under this Agreement for services provided through the date of termination including interest (prime + 2% or such amount as allowed by law); (d) require You to return the System at Your expense, and/or make the Property available to us to remove any Project materials or equipment from the Property;(e) disconnect, turn off, or take back the System by legal process or self-help (if legally available), provided Baker does not disturb the peace or violate the law (You agree that Baker will have access to Your Property and permission to enter Your Property in order to disable and/or remove the System until such time as Baker is paid in full and title to the System passes to You); (f) report such non-operational status of the System to Your utility, informing them that You are no longer net metering; (g) charge You a reasonable reconnection fee for reconnecting the System to Your utility or turning your System back on after it is disconnected or turned off due to your default; and (h) any other legal remedies including, without limitation, mechanics liens or similar remedies.

16. Lien Releases.

If a lien should be placed on Your Property, upon satisfactory payment for any portion of the work performed, Baker shall, prior to any further payment being made by Customer, furnish to Customer a full and unconditional release from any potential lien claimant claim or mechanics lien authorized pursuant to sections 8400 and 8404 of the Civil Code for that portion of the work for which payment has been made by Customer.

17. Insurance.

17.1 Commercial General Liability Insurance (CGL): Baker carries commercial general liability insurance written by Alliant Insurance Services. You may call Jim Castle at 619-238-1828 to check Baker's insurance coverage.

17.2 Workers' Compensation Insurance: Baker carries workers' compensation insurance for all employees.

18. Indemnification.

Each party agrees to indemnify, defend, and hold harmless the other party and its employees, officers, directors, agents, and assigns from any and all third party claims, actions, costs, expenses (including reasonable attorneys' fees and expenses), damages, liabilities, penalties, losses, obligations, demands, and liens of any kind arising out of or relating to its failure to perform its obligations under this Agreement. Neither party will be required to indemnify the other party for such other party's own negligence, willful misconduct, or fraud.

19. Governing Law.

The laws of the State of California will govern this Agreement without giving effect to conflict of laws principles.

20. Entire Agreement.

This Agreement contains the parties' entire agreement regarding the Project. There are no other agreements regarding this Agreement, either written or spoken. Any change to this Agreement must be in writing and signed by both parties. Only an authorized representative of Baker may execute any change to this Agreement on behalf of Baker. If any portion of this Agreement is determined to be unenforceable or invalid, the remaining provisions shall be enforced in accordance with their terms or shall be interpreted or rewritten so as to make them enforceable.

Provisions that should reasonably be considered to survive termination of this Agreement will survive. Baker may assign or subcontract any of its rights or obligations under this Agreement to any successor, partner, or purchaser.

21. Waiver.

Any delay or failure of a party to enforce any of the provisions of this Agreement, including but not limited to any remedies listed in this Agreement, or to require performance by the other party of any of the provisions of this Agreement, shall not be construed to be a waiver of such provisions or a party's right to enforce that provision or affect the validity of this Agreement.

22. Exercise of Reasonable Care.

Baker will exercise reasonable care not to damage Your Property during installation of the System. In the event of damage to the Property (other than the System) due to Baker's installation of the System, Baker agrees to make reasonable efforts to repair such damage at Baker's cost.

23. Limited Warranty.

23.1 EXCEPT AS EXPRESSLY SET FORTH IN THE LIMITED WARRANTY AND PRODUCTION GUARANTEE ATTACHED AS EXHIBIT 2 TO THE AGREEMENT, BAKER DISCLAIMS, AND YOU WAIVE, ALL OTHER WARRANTIES OR GUARANTEES, EXPRESS OR IMPLIED, INCLUDING WITHOUT LIMITATION AS TO THE MERCHANTABILITY, FITNESS FOR ANY PURPOSE, CONDITION, DESIGN, CAPACITY, SUITABILITY OR PERFORMANCE OF THE PROJECT OR ITS INSTALLATION.

23.2 UPON RECEIPT OF PAYMENT IN FULL UNDER THIS AGREEMENT, ALL WARRANTIES THAT ARE PROVIDED BY MANUFACTURERS OF EQUIPMENT USED IN THE PROJECT WILL BE TRANSFERRED DIRECTLY TO YOU. YOU UNDERSTAND THAT BAKER HAS NO RESPONSIBILITY WITH RESPECT TO SUCH WARRANTIES OTHER THAN TO TRANSFER THEM TO YOU. BAKER SHALL NOT BE LIABLE TO CUSTOMER UNDER THIS WARRANTY IF AN ALLEGED DEFECT IN ANY WORK OR EQUIPMENT WAS CAUSED BY CUSTOMER'S OR ANY THIRD PERSON'S (FOR WHOM BAKER IS NOT RESPONSIBLE AS PROVIDED HEREIN) MISUSE, NEGLECT, UNAUTHORIZED ATTEMPTS TO REPAIR, OR ANY OTHER CAUSE BEYOND THE RANGE OF THE INTENDED USE, OR BY ACCIDENT, FIRE, LIGHTNING OR OTHER HAZARD.

24. Limitation of Liability.

24.1 EACH PARTY'S LIABILITY TO THE OTHER UNDER THIS AGREEMENT SHALL BE LIMITED TO DIRECT, ACTUAL DAMAGES ONLY. BOTH PARTIES AGREE THAT IN NO EVENT SHALL EITHER PARTY BE LIABLE TO THE OTHER FOR CONSEQUENTIAL, INCIDENTAL, PUNITIVE, EXEMPLARY, SPECIAL OR INDIRECT DAMAGES, INCLUDING WITHOUT LIMITATION (a) PHYSICAL OR MENTAL PAIN AND SUFFERING OR EMOTIONAL DISTRESS DAMAGES; (b) COSTS OF TEMPORARY SHELTER, TRANSPORTATION, FOOD, MOVING, STORAGE, OR SIMILAR INCIDENTAL DAMAGES OR EXPENSES; (c) LOSS OF USE, LOSS OF OPPORTUNITY, LOSS OF FAIR MARKET VALUE, LOSS OF RENTAL VALUE, LOSS OF FINANCING, OR SIMILAR LOSS OF ECONOMIC OPPORTUNITY; OR (d) LOSS OF PROFITS, LOSS OF BUSINESS OPPORTUNITY OR REPUTATION.

24.2 In no event will either party's liability under this Agreement or in connection with the Project exceed $1,000,000.00, including, without limitation, damages to Your Property during the performance of the Project or resulting from the Project. Customer agrees to provide Baker with written notice of any claims arising out of this Agreement and/or the Project prior to making final payment and any claims not made at or before such time will be deemed waived by Customer making final payment.

25. Limitation of Use

25.1 YOUR SYSTEM, WITHOUT THE ADDITION OF AN INCORPORATED BATTERY IS NOT INTENDED FOR USE DURING A UTILITY GRID OUTAGE AND WILL SHUT DOWN UNDER THIS CIRCUMSTANCE.

25.2 YOUR SYSTEM IS NOT INTENDED FOR USE AS PRIMARY OR BACK-UP POWER SOURCE FOR LIFE-SUPPORT, OTHER MEDICAL EQUIPMENT, OR ANY OTHER USE WHERE PRODUCT FAILURE COULD LEAD TO INJURY TO PERSONS OR LOSS OF LIFE OR CATASTROPHIC DAMAGE.

BAKER DISCLAIMS ANY AND ALL LIABILITY ARISING OUT OF YOUR USE OF YOUR SYSTEM USED FOR THESE PURPOSES AND DISCLAIMS ANY AND ALL LIABILITY ARISING OUT OF BAKER'S SERVICE OR REFUSAL TO SERVICE YOUR SYSTEM IN SUCH CIRCUMSTANCES.

25.3 ANY INCORPORATED BATTERY TO YOUR SYSTEM IS INTENDED TO BE CHARGED FROM THE SOLAR ARRAY, AND THEIR

DISCHARGE FOR SELF-CONSUMPTION PURPOSES ONLY. A BATTERY IS NOT INTENDED FOR DISCHARGE BACK TO THE UTILITY GRID.

25.4 BAKER ASSUMES NO LIABILITY FOR THE TECHNICAL LIMITATIONS OF ANY INCORPORATED BATTERY AS PART OF THE SYSTEM, THE PROGRAMMING OF THE BATTERY OR INVERTERS, THE LOADS POWERED BY BATTERY, OR THE LENGTH OF TIME THOSE LOADS CAN BE POWERED BY BATTERY. HOMEOWNER WILL NEED TO SELF-MANAGE THEIR CONSUMPTION PATTERNS AND LOAD FOR BOTH BACK-UP AND SELF-CONSUMPTION APPLICATIONS OF INCORPORATED BATTERIES.

26. Time of the Essence.

The parties agree that time is of the essence in this Agreement.

27. Execution in Counterparts.

This Agreement may be signed by the parties in multiple counterparts, all of which shall be taken together as a single document.

28. Final Agreement.

BY SIGNING THIS DOCUMENT EACH PARTY REPRESENTS AND AGREES THAT: (A) THIS DOCUMENT REPRESENTS THE FINAL AGREEMENT BETWEEN PARTIES WITH RESPECT TO THE SUBJECT MATTER HEREOF, (B) THIS DOCUMENT SUPERSEDES ANY PROPOSALS, ESTIMATES OR OTHER WRITTEN OUTLINE OF TERMS AND CONDITIONS RELATING TO THE SUBJECT MATTER HEREOF, (C) THERE ARE NO UNWRITTEN ORAL AGREEMENTS BETWEEN THE PARTIES, AND (D) THIS DOCUMENT MAY NOT BE CONTRADICTED BY EVIDENCE OF ANY PRIOR, CONTEMPORANEOUS, OR SUBSEQUENT ORAL AGREEMENTS, WRITINGS, PROPOSALS OR UNDERSTANDINGS OF THE PARTIES.

Exhibit 1 GENERAL TERMS AND CONDITIONS ACKNOWLEDGE

Customer Signature: DocuSigned by: Eric G Hoffman

EXHIBIT 2

LIMITED WARRANTY AND PRODUCTION GUARANTEE

THE FOLLOWING DESCRIBES THE TERMS AND CONDITIONS OF THE LIMITED WARRANTY AND PRODUCTION GUARANTEE (COLLECTIVELY, THE "**WARRANTY**") COVERING THE PHOTOVOLTAIC SOLAR SYSTEM ("**SYSTEM**") INSTALLED AT YOUR PROPERTY PURSUANT TO THE HOME IMPROVEMENT AGREEMENT ("**AGREEMENT**") ENTERED INTO BY AND BETWEEN YOU ("**CUSTOMER**") AND NB BAKER ELECTRIC, INC. DBA BAKER ELECTRIC HOME ENERGY ("**BAKER**"). ALL CAPITALIZED TERMS USED BUT NOT DEFINED IN THIS WARRANTY WILL HAVE THE MEANINGS SET FORTH IN THE AGREEMENT.

1. What is the Limited Warranty and what does it cover?

The Limited Warranty is part of the Agreement between You and Baker under which Baker agrees to provide You with certain limited warranties for the System installed at Your Property by Baker, which include (collectively, the "**Limited Warranty**"):

(a) 25-Year Limited Workmanship and Installation Warranty. Baker warrants that the System will be constructed and installed in a good workmanlike manner according to the standards of care and diligence generally practiced by solar engineering, construction, and installation companies when installing residential photovoltaic solar power systems of a similar size and type as the System in the geographic region where Your Property is located, and pursuant to (i) good engineering design practices, (ii) manufacturer's instructions, (iii) applicable law (including local codes and standards), (iv) required governmental approvals and permits, and (v) applicable requirements of the local utility. This **25-Year Limited Workmanship and Installation Warranty** will extend for a period of twenty-five (25) years from the date installation of the System is completed by Baker.

(b) 10-Year Limited Roofing Penetration Warranty. Baker warrants Your roof against water infiltration at each roofing penetration made by Baker in connection with the installation of the System and the surrounding area within a three (3) inch radius of each such penetration (collectively, the "Covered Roof Areas"). Baker will repair damage to Your roof and repair or compensate You for actual physical damage to Your property resulting from any water infiltration in the event of failure or defects in the Covered Roof Areas. This 10-Year Limited Roofing Penetration Warranty will extend for a period of ten (10) years from the date installation of the System is completed by Baker; provided, however, at commencement of the System installation the roof is judged to be in good /acceptable condition by Baker. Baker assumes no liability for or responsibility in relation to any existing roofing warranties during or after the installation of the System except to the extent of the 10-Year Limited Roofing Penetration Warranty.

(c) Limited Labor Warranty. Baker will provide, at no cost to Customer, reasonable labor support in connection with the repair or replacement of any non-energy storage device, material, equipment, product, or component incorporated, and made a part of the System (each a "**System Product**" and collectively the "**System Products**") that is covered under a warranty provided by any supplier, manufacturer, subcontractor, vendor, or other applicable third party (each a "**Supplier**" and collectively the "**Suppliers**") of such System Product. A **10-Year Limited Labor Warranty** for the System, excluding any incorporated Battery, will extend for a period of ten (10) years from the date installation of the System is completed by Baker. A **1-Year Limited Labor Warranty** for energy storage devices, if incorporated into the System, will extend for a period of one (1) year from the date of installation of the System completed by Baker.

2. Who warrants the materials and products contained in the System?

Baker will request and provide Customer with the standard warranties and guarantees (if any and where applicable) provided by Suppliers (including the manufacturers) of the System Products ("**System Product Warranties**"). To the extent permitted, Baker will assign the System Product Warranties directly to the Customer. Baker will reasonably assist the Customer with obtaining warranty assistance to the extent any System Products are defective or damaged. BAKER DOES NOT WARRANT THE SYSTEM PRODUCTS AND ASSUMES NO LIABILITY UNDER ANY SYSTEM PRODUCTS WARRANTIES OR FOR ANY DEFECTS IN THE SYSTEM PRODUCTS.

3. What is not covered by the Limited Warranty?

EXCEPT AS EXPRESSLY SET FORTH IN SECTION 1, ABOVE, BAKER DISCLAIMS, AND YOU WAIVE, ALL OTHER WARRANTIES OR GUARANTEES, EXPRESS OR IMPLIED, INCLUDING WITHOUT LIMITATION AS TO THE MERCHANTABILITY, FITNESS FOR ANY PURPOSE, CONDITION, DESIGN, CAPACITY, SUITABILITY, OR PERFORMANCE OF THE SYSTEM AND/OR THE SYSTEM INSTALLATION.

In addition, the following items and circumstances (without limiting other potential exclusions from coverage) are expressly excluded from coverage under the Limited Warranty:

(a) Damage, malfunction, or degradation of electrical output caused by the Customer's failure to properly operate or maintain the System (including keeping the System free from shading) in accordance with the recommended maintenance requirements from Baker and the Suppliers (including the manufacturers) of the System Products incorporated into and making up the System;

(b) Damage, malfunction, or degradation of electrical output caused by any repair or replacement using a part or service or performed by personnel not authorized by Baker in writing;

(c) Damage, malfunction, or degradation of electrical output resulting from Customer or third party abuse, accident, alteration, improper use, negligence, or vandalism, or from earthquake, erosion, corrosion, fire, flood, earth or ground fill movement, or other acts of God;

(d) Loss or damage caused by Customer's failure to take appropriate action to minimize any damage as soon as reasonably practicable;

(e) Cosmetic defects stemming from normal wear and tear of the System, including without limitation, modules, inverters, disconnects, and conduit;

(f) Loss of System monitoring capability due to an interruption in internet connectivity at the Property or failure of monitoring equipment and related components;

(g) Damage, malfunction, or degradation of the System due to failure of the structural integrity of the support system for the System;

(h) Defective or damaged System Products, whether or not covered by System Product Warranties;

(i) Normal wear and tear of the System (such as fuse replacement);

(j) Personal or bodily injury of any kind (including physical or mental pain and suffering or emotional distress), medical, hospital, rehabilitation, or other incidental expenses;

(k) Cost of shelter, transportation, food, moving, storage, or any other incidental or consequential damages or expenses related to any defect or repair or replacement of any defects under the Limited Warranty; and

(l) Loss of use, loss of opportunity, loss of fair market value, loss of rental value, or any other consequential damages or losses.

4. What is the Production Guarantee?

Baker estimates that on each two (2) year anniversary (each an "**Evaluation Date**") of the date the utility first grants permission to operate Your System ("**Initial Production Date**"), the System will have produced the Expected Cumulative Production (as defined below) shown on the Guaranteed Production Table below. For a period of ten (10) years from the Initial Production Date, Baker will guarantee (the "**Production Guarantee**") that as of each Evaluation Date, the System will have produced Actual Cumulative Production (as defined below) greater than or equal to the corresponding Guaranteed Cumulative Production (as defined below) set forth for such Evaluation Date in the Guaranteed Production Table below, provided that the following conditions are met throughout the term of the Production Guarantee:

(a) Any shade-causing circumstances or conditions identified in the Agreement with respect to Your Property prior to installation of the System that You agreed to eliminate have been eliminated prior to the Initial Production Date;

(b) There is no damage, malfunction, or degradation of electrical output caused by the Customer's failure to properly operate or maintain the System (including keeping the System free from shading) in accordance with the recommended maintenance requirements from Baker and the Suppliers (including the manufacturers) of the System Products incorporated into and making up the System;

(c) Baker is able to continuously monitor the System as required under Section 5 below and there are no interruptions in internet connectivity or failures of monitoring equipment or related components lasting for more than forty-eight (48) hours (any connectivity outages lasting for more than thirty (30) days will automatically void the Production Guarantee unless otherwise agreed by Baker in writing);

(d) Customer maintains continuous active electrical service with respect to the System (any connectivity outages lasting for more than thirty (30) days will automatically void the Production Guarantee unless otherwise agreed by Baker in writing);

(e) Any production deficiencies are due to a failure of Baker's design, engineering, or installation of the System; and

(f) Any production deficiencies are not otherwise covered by a System Product Warranty or due to defective System Products.

You, as the owner of the Property and any subsequent owners of the Property, agree to allow Baker and its authorized representatives access Your Property to inspect and service the System for a period of ten (10) years from the Initial Production Date in connection with the Production Guarantee.

Baker does not warrant or guarantee any specific electrical performance of the System other than the Production Guarantee.

For the purposes of this Warranty, "**Expected Cumulative Production**" as of each Evaluation Date will be the Expected Cumulative Production (in kWh), including degradation, set forth for such Evaluation Date in the Guaranteed Production Table below.

For the purposes of this Warranty, "**Actual Cumulative Production**" as of each Evaluation Date will be the cumulative quantity of electricity (in kWh), including degradation, produced by the System from the Initial Production Date, as measured by Baker through the installed inverters' remote monitoring of the System, as described in Section 3 below.

If at any time Baker is unable to monitor the System remotely for any reason or for any period, Actual Cumulative Production during such period will be estimated by Baker. Additionally, Actual Cumulative Production will be adjusted to include electricity that Baker estimates would have been produced during any periods of time when the System is shut down or producing less power due to a transmission grid failure, at Your request, or Your failure to perform any of Your obligations under the Agreement and/or this Warranty.

For the purposes of this Warranty, "**Guaranteed Cumulative Production**" as of each Evaluation Date will be the Guaranteed Cumulative Production (in kWh), including degradation, set forth for such Evaluation Date in the Guaranteed Production Table below. The Guaranteed Cumulative Production on each Evaluation Date will be equal to ninety percent (90%) of the Expected Cumulative Production for such Evaluation Date.

GUARANTEED PRODUCTION TABLE		
Evaluation Date	**Expected Cumulative Production (kWh)**	**Guaranteed Cumulative Production (kWh)**
2 Years from Initial Production Date	[**17964** kWh]	[**16167**kWh]
4 Years from Initial Production Date	[**35677**kWh]	[**32109** kWh]
6 Years from Initial Production Date	[**53143** kWh]	[**47829**kWh]
8 Years from Initial Production Date	[**70365** kWh]	[**63329**kWh]
10 Years from Initial Production Date	[**87347** kWh]	[**78613**kWh]

5. What is required for monitoring in connection with the Production Guarantee?

In order for us to monitor the System and provide You with the Production Guarantee, Your Property must have and maintain active electrical service, and You will need to provide, at Your expense, a consistent and continuous internet connection through Your home network. Alternatively, Baker may, in its sole discretion, offer You cellular based monitoring of the System at additional cost. Prior to the commencement of the System installation, You must notify Baker if You will NOT provide the required internet access.

If You provide the electricity and the internet connection described above (or if Baker provides You with cellular based monitoring), Baker will passively monitor the System remotely for inverter alerts at no additional cost to You. In the event Baker provides cellular based monitoring, the 3G cellular service will be provided for twelve (12) years, to connect your monitoring system to the Internet. Upon expiration of the Baker provided 12 year cellular based monitoring period, if continued monitoring is desired, an alternate internet connection or service agreement will be required at Homeowner's cost. The type and cost of future service available at that time is unknown.

If You provide the required internet connection on the Initial Production Date but no longer wish to provide it during the term of the Production Guarantee, then Baker may, in its sole discretion, either offer You a cellular based monitoring solution at additional cost or terminate the Production Guarantee.

You agree to notify Baker immediately if the electricity at Your Property or Your internet connection will not be available for more than forty-eight (48) hours. If You fail to provide the electricity or internet connection described above for any period of time, Baker may estimate the power produced by the System using reasonable means. IF YOU FAIL TO PROVIDE THE ELECTRICITY OR INTERNET CONNECTION DESCRIBED ABOVE FOR A PERIOD LONGER THAN THIRTY (30) DAYS, THIS PRODUCTION GUARANTEE WILL AUTOMATICALLY TERMINATE AND BAKER WILL NO LONGER PROVIDE YOU WITH THE PRODUCTION GUARANTEE.

If the Property does not have suitable cellular coverage and You cannot or will not provide internet access, or the electricity is not available consistently, then Baker will be unable to properly monitor the System and cannot provide You with the Production Guarantee. In such an event, Baker will not be liable to You in the event that the Actual Cumulative Production is less than the Guaranteed Cumulative Production.

6. What happens if the System does not meet the Production Guarantee?

If the System fails to comply with the Cumulative Production Guarantee on any Evaluation Date, then within ninety (90) days of such Evaluation Date, Baker will have the option, at Baker's sole election, to either:

(a) Repair, upgrade, or add to the System (or any part thereof) to ensure that the System performs according to the Production Guarantee in subsequent Evaluation Periods; or

(b) Pay You an amount ("**Production Credit**") equal to the difference in kWh between the Guaranteed Cumulative Production and the Actual Cumulative Production as of the Evaluation Date, multiplied by $0.15.

In either of the above instances Baker will provide a revised GUARANTEED PRODUCTION TABLE to reflect Expected Cumulative Production after the remedy has been completed.

Customer Initials: EGH

7. What happens if the System performs better than the Production Guarantee?

If the System performs better than the Production Guarantee (i.e., the System produces more Actual Cumulative Production than the Guaranteed Cumulative Production during the term of the Production Guarantee) then this surplus energy is Yours at no additional cost. The Guaranteed Cumulative Production and Actual Cumulative Production are based on the cumulative amount of energy (kWh) produced by the System beginning on the Initial Production Date, so the surplus energy on any Evaluation Date will be automatically included in Actual Cumulative Production and will offset any future periods of lower electricity production.

8. Does an incorporated Battery effect the Production Guarantee?

No. Having an incorporated Battery as part of your System will not affect the Production Guarantee. A Battery incorporated into the System is designed to draw its charge from the solar array, simply storing the energy produced by the solar array for discharge according to its programming.

9. Will an incorporated Battery store and discharge enough energy to power my entire home?

A Battery can provide automatic backup power only to a selected set of essential circuits, and may not power your entire Property. Loads powered by the Battery, and the length of time the loads can be powered are dependent upon the charge of the Battery at the time of a grid outage, the maximum discharge rate of the inverter and the Battery discharge programmed settings. Homeowner will need to self-manage their consumption patterns and load for both back-up and self-consumption applications.

10. Can my Battery be discharged to the grid?

No. It's not the intent or design of the System to discharge to the grid.

11. What ongoing maintenance services will Baker provide for incorporated System Battery?

To ensure the proper maintenance and continued performance of the Battery, if incorporated into the System, Baker will maintain the Battery to the operating standards set by Battery Product Suppliers and provide preventative maintenance services in accordance with Manufacturer's recommended maintenance schedule including, but not limited to, system support, problem diagnosis, and onsite repair for a period of ten (10) years from the date of installation of the System completed by Baker. Please review your Agreement for additional information about any warranties on installation and equipment.

(a) Baker will provide, at no additional cost to the Customer, its remote preventative maintenance services, telephone technical system support

(b) Modify the behavior of the System to the extent possible. Behavior of the Battery is defined as remotely programmable features such as depth of discharge and timing of discharge.

(c) Baker will provide its on-site Battery repair and preventive maintenance services to the Customer at then current labor and material rates, following the expiration of the 1-Year Limited Labor Warranty.

12. What circumstances will void this Warranty?

In addition to the limitations and exclusions set forth above, the Limited Warranty and the Production Guarantee provided in this Warranty will be void and will not apply to repairs, improvements, corrections, or replacements of the System required by, or reduced or lost electricity production resulting from, any of the following:

(a) Your gross negligence or Your intentional damage to the System;

(b) Your breach of or failure to perform Your obligations under the Agreement and/or this Warranty;

(c) Any actual or attempted installation, repair, alteration, replacement, movement, change or modification to the System made by anyone other than Baker or without Baker's prior written consent; or Shading due to foliage or other obstacles that shade the System in an amount greater than the System's location was shaded on the Initial Production Date.

(d) Any violation of a Manufacturer's Warranty;

(e) **Energizing your System without utility's prior written consent to operate and Baker's expressed consent**.

13. Under what circumstances will Baker's obligation to perform under this Warranty be extended?

Baker will not be in breach of this Warranty because of any failure or delay in complying with its Limited Warranty, Production Guarantee, or any other obligations under this Warranty if such failure or delay is the result of one or more Force Majeure Events or their effects. Additionally, the periods allowed for the performance by Baker of its obligations under this Warranty shall be extended for so long as such Force Majeure Events or effects continue. In order to claim relief due to Force Majeure Events, Baker will provide You with prompt notice of the Force Majeure Event, to the extent reasonably practicable. The suspension of Baker's performance must be of no greater duration and scope than that required by the Force Majeure Event and Baker's excused obligation must not be one which arose before the Force Majeure Event and which should have been fully performed before the Force Majeure Event occurred.

14. How do You contact Baker with questions or submit a claim to get service? How will Baker contact You?

To ask a question regarding this Warranty, You may call Baker at (760) 546-6000 during normal business hours.

To submit a claim or provide any other notice under this Warranty, You must send us the request in writing, by email, certified or registered first-class mail, post prepaid, with a return receipt requested, or a reputable courier service requiring signature for receipt, at the following address:

Baker Electric Home Energy
Attn: Warranty Claims
2120 Harmony Grove Road
Escondido, California 92029
service@bakerelectricsolar.com

To notify You under this Warranty, Baker may send You a notice in writing in the manner described above, to the email or mailing address provided in the Agreement or any subsequent contact information that You provide under the Agreement or this Warranty.

The parties agree that any emailed document shall be deemed an original document.

15. What happens if You submit a claim?

If Baker receives a claim under this Warranty from You, Baker will review Your claim and notify You within fifteen (15) business days whether Your claim is covered by this Warranty. If Baker cannot make this determination without inspecting the System, Baker will send our employee, contractor, or agent to Your Property within fifteen (15) business days of the date Baker receives Your claim, and Baker will then notify You within ten (10) business days of the visit as to whether Your claim is covered by this Warranty. If Your claim is covered by this Warranty, Baker will either pay You the required amounts under the Production Guarantee or make the repair or replacement under the Limited Warranty within a reasonable period of time, at no cost to You. Baker may use new or reconditioned parts to make repairs. Baker will use commercially reasonable efforts to replace parts with the same type of equipment but may substitute materials or types of equipment if necessary. Any equipment substitution will not change our Production Guarantee obligations. Additionally, at Baker's option (but at no additional cost to You), Baker may elect to make cosmetic repairs that are not covered by the Limited Warranty or to upgrade or add to any part of the System to ensure that it performs according to the Production Guarantee.

If Your claim is not covered by this Warranty, or if Your claim is covered but Baker elects to pay You the required amounts under the Production Guarantee without making any repair or replacement, then You may request that Baker make the repair or replacement at Your cost and expense. Baker will send a representative to Your Property to provide You with a price quote for the requested services. You may then elect whether to have Baker provide the requested services at the quoted price. The price quote will be based on standard pricing terms that are on a time and materials basis.

16. What happens if You want to move the System for any reason, including renovation or repair of Your Property?

The System may only be moved by Baker, and only in order to permit You to renovate or repair the Property at Your request and Your expense. Baker will send a representative to Your Property to provide You with a price quote for moving the System. You may then elect whether to have Baker move the System at the quoted price. The price quote will be based on standard pricing terms that are on a time and materials basis. ANY MOVEMENT, CHANGE, ALTERATION, OR OTHER MODIFICATION OF THE SYSTEM BY ANYONE OTHER THAN BAKER WITHOUT BAKER'S PRIOR WRITTEN CONSENT WILL AUTOMATICALLY VOID BOTH THE LIMITED WARRANTY AND THE PRODUCTION GUARANTEE.

17. What happens if You sell Your Property?

This Warranty only protects the person that owns the Property including the System. If You transfer all of Your rights and obligations in connection with the System to a transferee of Your Property in a manner that is permitted by the Agreement, then Your remaining rights and obligations under this Warranty will also transfer to the transferee. YOU MAY NOT OTHERWISE TRANSFER YOUR RIGHTS OR OBLIGATIONS UNDER THIS WARRANTY. ANY TRANSFEREE OF THE SYSTEM WILL BE BOUND BY ALL REMAINING OBLIGATIONS AND DUTIES OF THE CUSTOMER UNDER THE AGREEMENT AND THIS WARRANTY.

18. How does this Warranty relate to the Agreement?

This Warranty is an exhibit to the Agreement and is subject to all of the terms and conditions of the Agreement. In the event of any conflict between this Warranty and the terms of the Agreement, the terms of this Warranty will control.

LIMITED WARRANTY AND PRODUCTION GUARANTEE ACKNOWLEDGED

Customer Signature: DocuSigned by: Eric G Hoffman

EXHIBIT 3

NOTICE OF CANCELLATION FORMS

NOTICE OF CANCELLATION (Customer Copy)

4/8/2020
Agreement Date

You may cancel this transaction, without any penalty or obligation, within three (3) business days from the above date.

If you cancel, any property traded in, any payments made by you under the contract or sale, and any negotiable instrument executed by you will be returned within ten (10) days following receipt by the seller of your cancellation notice, and any security interest arising out of the transaction will be canceled.

If you cancel, you must make available to the seller at your residence, in substantially as good condition as when received, any goods delivered to you under this contract or sale, or you may, if you wish, comply with the instructions of the seller regarding the return shipment of the goods at the seller's expense and risk.

If you do make the goods available to the seller and the seller does not pick them up within twenty (20) days of the date of your notice of cancellation, you may retain or dispose of the goods without any further obligation. If you fail to make the goods available to the seller, or if you agree to return the goods to the seller and fail to do so, then you remain liable for performance of all obligations under the contract.

To cancel this transaction, mail or deliver a signed and dated copy of this cancellation notice, or any other written notice, or send a telegram to

NB Baker Electric, Inc. dba Baker Electric Home Energy,

at 2140 Enterprise Street, Escondido, CA 92029,

no later than midnight of the third day following the Agreement Date: 4/8/2020
[Agreement Date]

I hereby cancel this transaction. _____
(Date)

_____
(Customer's signature) **(SIGN HERE ONLY IF CANCELLING)**

DocuSign Envelope ID: DE47A3A2-8350-4EBA-A55A-5DBC114BE26C

BAKER ELECTRIC
HOME ENERGY

NOTICE OF CANCELLATION (Contractor Copy)

4/8/2020
Agreement Date

You may cancel this transaction, without any penalty or obligation, within three (3) business days from the above date.

If you cancel, any property traded in, any payments made by you under the contract or sale, and any negotiable instrument executed by you will be returned within ten (10) days following receipt by the seller of your cancellation notice, and any security interest arising out of the transaction will be canceled.

If you cancel, you must make available to the seller at your residence, in substantially as good condition as when received, any goods delivered to you under this contract or sale, or you may, if you wish, comply with the instructions of the seller regarding the return shipment of the goods at the seller's expense and risk.

If you do make the goods available to the seller and the seller does not pick them up within twenty (20) days of the date of your notice of cancellation, you may retain or dispose of the goods without any further obligation. If you fail to make the goods available to the seller, or if you agree to return the goods to the seller and fail to do so, then you remain liable for performance of all obligations under the contract.

To cancel this transaction, mail or deliver a signed and dated copy of this cancellation notice, or any other written notice, or send a telegram to

NB Baker Electric, Inc. dba Baker Electric Home Energy,

at 2140 Enterprise Street, Escondido, CA 92029,

no later than midnight of the third day following the Agreement Date: 4/8/2020
[Agreement Date]

I hereby cancel this transaction. _____
(Date)

_____
(Customer's signature) **(SIGN HERE ONLY IF CANCELLING)**

DocuSign Envelope ID: DE47A3A2-8350-4EBA-A55A-5DBC114BE26C

EXHIBIT 4

NOTICE ABOUT CONTRACTORS' STATE LICENSE BOARD

California Business & Professions Code § 7159(e)(5):

INFORMATION ABOUT THE CONTRACTORS' STATE LICENSE BOARD (CSLB):

CSLB IS THE STATE CONSUMER PROTECTION AGENCY THAT LICENSES AND REGULATES CONSTRUCTION CONTRACTORS.

CONTACT CSLB FOR INFORMATION ABOUT THE LICENSED CONTRACTOR YOU ARE CONSIDERING, INCLUDING INFORMATION ABOUT DISCLOSABLE COMPLAINTS, DISCIPLINARY ACTIONS AND CIVIL JUDGMENTS THAT ARE REPORTED TO CSLB.

USE ONLY LICENSED CONTRACTORS. IF YOU FILE A COMPLAINT AGAINST A LICENSED CONTRACTOR WITHIN THE LEGAL DEADLINE (USUALLY FOUR YEARS), CSLB HAS AUTHORITY TO INVESTIGATE THE COMPLAINT. IF YOU USE AN UNLICENSED CONTRACTOR, CSLB MAY NOT BE ABLE TO HELP YOU RESOLVE YOUR COMPLAINT. YOUR ONLY REMEDY MAY BE IN CIVIL COURT, AND YOU MAY BE LIABLE FOR DAMAGES ARISING OUT OF ANY INJURIES TO THE UNLICENSED CONTRACTOR OR THE UNLICENSED CONTRACTOR'S EMPLOYEES.

FOR MORE INFORMATION:

VISIT CSLB'S WEBSITE AT WWW.CSLB.CA.GOV

CALL CSLB AT 800-321-CSLB (2752)

WRITE CSLB AT P.O. BOX 26000, SACRAMENTO, CA 95826

EXHIBIT 5

MECHANICS LIEN WARNING

NOTICE TO PROPERTY OWNER: If bills are not paid in full for the labor, services, equipment, or materials furnished or to be furnished, a mechanics lien leading to the loss, through court foreclosure proceedings, of all or part of your property being so improved may be placed against the property even though you have paid your contractor in full. You may wish to protect yourself against this consequence by (1) requiring your contractor to furnish a signed release by the person or firm giving you this notice before making payment to your contractor, or (2) any other method or device that is appropriate under the circumstances.

California Business & Professions Code § 7159(e)(4):

Anyone who helps improve your property, but who is not paid, may record what is called a mechanics lien on your property. A mechanics lien is a claim, like a mortgage or home equity loan, made against your property and recorded with the county recorder.

Even if you pay your contractor in full, unpaid subcontractors, suppliers, and laborers who helped to improve your property may record mechanics liens and sue you in court to foreclose the lien. If a court finds the lien is valid, you could be forced to pay twice or have a court office sell your home to pay the lien. Liens can also affect your credit.

To preserve their right to record a lien, each subcontractor and material supplier must provide you with a document called a "Preliminary Notice." This notice is not a lien. The purpose of the notice is to let you know that the person who sends you the notice has the right to record a lien on your property if he or she is not paid.

BE CAREFUL. The Preliminary Notice can be sent up to twenty (20) days after the subcontractor starts work or the supplier provides material. This can be a big problem if you pay your contractor before you received the Preliminary Notices.

You will get the Preliminary Notices from your prime contractor or from laborers who work on your project. The law assumes that you already know they are improving your property.

PROTECT YOURSELF FROM LIENS. You can protect yourself from liens by getting a list from your contractor of all the subcontractors and material suppliers that work on your project. Find out from your contractor when these subcontractors started work and when these suppliers delivered goods or materials. Then wait twenty (20)20 days, paying attention to the Preliminary Notices you receive.

PAY WITH JOINT CHECKS. One way to protect yourself is to pay with a joint check. When your contractor tells you it is time to pay for the work of a subcontractor or supplier who has provided you with a Preliminary Notice, write a joint check payable to both the contractor and the subcontractor or material supplier.

For other ways to prevent liens, visit CSLB's website at www.cslb.cs.gov or call CSLB at 800-321-CSLB (2752).

REMEMBER, IF YOU DO NOTHING, YOU RISK HAVING A LIEN PLACED ON YOUR HOME. This can mean that you may have to pay twice, or face the forced sale of your home to pay what you owe.

EXHIBIT 6

ASSOCIATION APPROVAL ACKNOWLEDGEMENT

NOTICE REGARDING REQUIREMENT OF ASSOCIATION APPROVAL:

You are solely responsible for any and all costs and expenses of any nature associated with obtaining any approvals required from any Homeowners Association or any other association or organization (each an "**Association**") with any rights or claims over or with respect to the Property in connection with the installation of Your System under this Agreement. Baker agrees to provide You with reasonable support and documentation required by any Association in connection with You obtaining any required Association approval.

Association Exists? (Select Yes or No) No

Customer Signature: DocuSigned by: Eric G Hoffman 11C8B689EA55417...

Association Name and Contact Information (indicate if not applicable, or unknown at this time):
HOA Name:
HOA Phone (number with area code only):

[OR]

ALTERNATIVE WAIVER OF ASSOCIATION APPROVAL REQUIREMENT AND INDEMNITY:

You may, at your own discretion and at Your sole risk, authorize Baker to proceed with installation of Your System without advance written approval from any applicable Association.

By signing below, You hereby direct Baker to proceed with installation of the Your System even though You have not received advance written approval from all applicable Associations.

You agree that You will be solely responsible for, and will immediately reimburse, defend, and indemnify Baker for all costs and expenses incurred directly and indirectly by Baker in connection with or arising out of Your election to waive and not obtain advance written Association approval for the installation of Your System. Such costs may include, without limitation, the cost of removing and replacing some or all of the installed System and/or the cost to revise the design, and a reasonable mark-up for overhead and profit in connection with any such work.

CUSTOMER:

Signature:_____
Dated: _____

Signature: _____
Dated: _____

EXHIBIT 7

FORM OF CHANGE ORDER

To:

From:

Job Number:
Job Name:
Change Order Number:
Date:

Description:

Qualifications:

Exclusions:

Original contract / prior amount to this revision . . . . .

Add for this revision . . . . . .

New Total Contract value . . . . . .

Payment for this change order is due upon completion of change order work. If this change order is amending your lease/loan, you will be required to sign a new loan/lease document.

If this change order meets your approval, please sign where noted below and return a copy to our office to serve as authorization of the above.

Both parties agree that this change order amends the previously signed contract between homeowner and Baker Electric Home Energy.

No other terms or conditions of the Agreement shall be negated or changed as a result of this Change Order.

CUSTOMER:

Signature: _____
Name:

Dated: _____

Signature: _____
Name: _____
Dated: _____

CONTRACTOR:

NB Baker Electric Inc. dba Baker Electric Home Energy,
a California corporation

Signature: _____
Name: _____
Title: _____
Dated: _____

SAMPLE

DocuSign Envelope ID: DE47A3A2-8350-4EBA-A55A-5DBC114BE26C

CA Contractor License No. 858088

BAKER ELECTRIC
HOME ENERGY

ADDENDUM TO HOME IMPROVEMENT CONTRACT PHOTOVOLTAICS - Standard Tesla Powerwall Installation

A Standard Tesla Powerwall Installation includes:

a) Tesla Powerwall Home Battery (refer to scope of work for battery quantity)
b) Gateway – Tesla Automatic Transfer Switch
c) Essential Loads Panel - 100A
d) Relocation of up to 8 circuits, up to 30 Amps single pole breakers, within 10' of MSP
e) Design
f) Completion of all Engineering, Permitting, and Inspections

*A standard Tesla Powerwall installation does not include a main service panel upgrade, any stucco or drywall work, tracing incorrectly labeled circuits, nor any additional labor and/or materials as a result of a Tesla Powerwall being located more than 10 feet from the main service panel or relocating any circuits from a subpanel are not included.

Non-Standard work may be included if called out within the scope of work, or as additional work within the Home Improvement Agreement, or potentially as part of a change order signed by both parties after a confirming site survey.

**Baker does not guarantee eligibility, transfers, or amounts in relation to the Self Generation Incentive Program ("SGIP"). If an SGIP transfer is requested, homeowner is responsible for requesting and following up on transfers directly with California Sustainable Energy ("CSE") and notifying Baker upon completion. SGIP program eligibility is continually changing as new proposals are still out from the California Public Utilities Commission ("CPUC")

HOMEOWNER:

DocuSigned by:
Eric G Hoffman
Signature of Homeowner

Signed Date: 4/8/2020

Eric G Hoffman
Print Name of Homeowner

BAKER:

Signature of Baker

Print Name of Baker

BAKER ELECTRIC
HOME ENERGY

Serial Numbers

Modules	Optimizers
003K5XL2U2AM	SJ4819A-0127DB218-59
003K5KG2U293	SJ2619A-012108247-EB
003K5ZQ2U2AP	SJ2619A-0121211A0-D5
003K5DW2U2AQ	SJ4819A-0127E2FD9-98
003K5VZ2U2AW	SJ4619A-0126EBB28-63
003K5AJ2U2AX	SJ4619A-01270CF2F-80
003K5GX2U2AZ	SJ4619A-0126EBA9A-D4
003K5UR2U294	SJ3717A-01100C114-E6
003K5PD2U2B0	SJ4619A-012709506-1D
003K5PD2U28C	SJ4619A-01272E481-E9
003K5QE2U284	SJ4619A-01270B0B5-E7
003K5AJ2P2H2	SJ4619A-012708FEA-FB
003K5JC2U26U	SJ4619A-01270CF8D-DE
003K5CY2U26Z	SJ4619A-01272E2C3-29
003K5PD2P32C	SJ4619A-01270CF45-96
003K5MH2U28H	SJ4619A-01270BE3A-7A
Inverter	
SJ5019-073078476-74	
GSM Card	
89311882000004398531	
Battery	
P1092170-03-J:STG120068001W5V	
P1118431-00-L:STG120065001AYS	

SolarEdge Extended Warranty

Dear Customer, This is to certify that the standard limited warranty of the product listed below has been extended to

25 years

This warranty certificate is valid for the following device:

Inverter Serial Number:

SJ5019-073078476-74

This Warranty is valid until:

08/04/2045

Please make this document available for tracking should the need arise.
SolarEdge Technologies Ltd. | www.solaredge.com
For support visit: http://www.solaredge.com/service/support

solaredge

LG SOLAR MODULE LIMITED WARRANTY

The limited warranties specified below **(**hereinafter **"Limited Warranty")** apply to LG Solar Module models listed under Section 11 below (hereinafter **"Module(s)")** sold by LG Electronics U.S.A., Inc. (hereinafter "**LG**") and installed by a licensed contractor under applicable local and state laws, and extend only to the original end use purchaser and subsequent owner(s) of the location on which the Module(s) is originally installed (all such persons hereinafter referred to as "**Customer**"). The warranty start date ("**Warranty Start Date**") shall be the date of purchase by the original end use purchaser. If the Customer is unable to provide adequate documentation of the original purchase, the Warranty Start Date shall be ninety (90) days after the Module(s) was manufactured.

1. 15 Years of Limited Warranty for Module(s)

LG will, at its sole option, repair or replace the Module(s) if such Module proves to be defective in material or workmanship, for a period ending 15 years from the Warranty Start Date under normal application, installation, use and service conditions ("15 Years of Limited Warranty for Module(s)". This "15 Years Limited of Warranty for Module(s)" does not warrant a specific power output, which shall be exclusively covered under Section 2 hereinafter ("25 years of Limited Warranty for Power Output")

2. 25 Years of Limited Warranty for Power Output

LG warrants that for a period of one (1) year from Warranty Start Date the actual power output of the module will be no less than 98% of the labeled power output. From the second year, the warranty for power output will decline annually by 0.5% in each of the remaining 24 years. During the 25th year, the actual output of at least 86% of the nameplate power output specified on the Module will be achieved. The power output values shall be those measured under LG's standard test conditions as follows: (a) light spectrum of AM 1.5; (b) an irradiation of 1000 W per *m*2 and; (c) a cell temperature of 25 degrees centigrade at right angle irradiation.

If the Module does not meet the warranted power output levels set out above when measured by LG or by an independent measuring institute agreed to prior to testing by LG under standard test conditions (IEC 61215) taking into account a ±3% measurement tolerance range, LG will, at its sole and absolute discretion, either (i) repair the Module(s); (ii) supplement such deficiency in power by either: (a) providing additional Module(s) to the Customer, or (b) replacing the Module(s); or (iii) Refund the difference between guaranteed minimal power output and actual power output (measured under LG's STC) multiplied by the then current market price of the Module(s) or a comparable model at the time of the Customer's claim.

3. How this Limited Warranty Applies

The remedies set forth in this Limited Warranty shall be the sole and exclusive remedies, and the original warranty period in this Limited Warranty shall not extend beyond the period set forth therein, nor will a new warranty period begin, upon repair, replacement or pro-rated refund due to power loss at LG's sole option provided under this Limited Warranty.

Repair or replacement will be made with new or re-manufactured Module(s) or parts and the replaced Module(s) or parts shall become the property of LG. In the event the Module(s) is no longer available, LG reserves the right, at its sole option, to deliver new

or remanufactured Module(s) that may differ in size, color, shape, model number, and/or power level.

This Limited Warranty covers the transportation cost for reshipment of any repaired or replaced Module(s) to the Customer site, but does NOT cover the transportation cost and risk including shipping damage or loss for return of the Module(s) to LG or LG's authorized agent and any other costs associated with installation, removal, or re-installation of the Module(s). If Module(s) returned to LG is found not to be defective or this Limited Warranty has expired, the Customer is responsible to pay for return shipping cost.

4. Limited Warranty Exclusions

4-1. This Limited Warranty does NOT apply to Module(s):

(a) Sold and/or installed outside the geographic territory of the United States and US territories;

(b) Sold AS IS or WITH ALL FAULTS or consumables; or

(c) That had a serial number or any part thereof altered, defaced or removed.

4-2. This Limited Warranty also does NOT apply to Module(s) which have been subjected to:

(a) Damage and/or failure caused by use on a mobile unit including, but not limited to, vehicles, vessels, etc.;

(b) Damage and/or failure caused by non-compliance with national and local electric codes;

(c) Damage and/or failure caused by installations not in conformance with the Module(s) specifications, installation manuals, operation manuals, or labels attached to the Module(s);

(d) Damage and/or failure caused by improper wiring, installation, or handling;

(e) Damage and/or failure caused by devices and/or parts other than the Module(s) or by mounting methods of such devices and/or parts;

(f) Damage and/or failure caused by improper or incorrectly performed maintenance, operation or modification;

(g) Damage and/or failure caused by removal from the original place of installment;

(h) Damage and/or failure caused by repairs not in accordance with LG's instructions;

(i) Damage and/or failure caused by inappropriate handling during storage, packaging or transportation;

(j) Damage and/or failure caused by external shock such as flying objects or external stress;

(k) Damage and/or failure caused by direct contact with environmental pollution such as soot, acid rain, or industrial chemicals including ammonia;

(l) Damage and/or failure caused by direct contact with salt water;

(m) Damage and/or failure caused by natural forces (earthquakes, tornados, floods, lightning, hurricanes, heavy snow, etc.) and fire, power failures, power surges or other unforeseen circumstances that are beyond LG's control;

(n) Damage and/or failure caused by terrorist acts, riots, war or other man-made disasters;

(o) Damage and/or failure caused by external stains or scratches that do not affect output;

(p) Damage and/or failure caused by sound, vibration, rust, scratching, or discolorations that are the result of normal wear and tear,

aging or continuous use; or

(q) Damage and/or failure caused by Module(s) installed in a location that exceeds operating conditions.

5. Limitation of Warranty Scope

EXCEPT TO THE EXTENT PROHIBITED BY APPLICABLE LAW, ANY IMPLIED WARRANTY OF MERCHANTABILITY OR FITNESS FOR A PARTICULAR PURPOSE ON THE MODULE(S) IS LIMITED IN DURATION OF THIS LIMITED WARRANTY.

UNDER NO CIRCUMSTANCES SHALL LG BE LIABLE FOR ANY INCIDENTAL, SPECIAL OR CONSEQUENTIAL DAMAGES INCLUDING, WITHOUT LIMITATION, LOST GOODWILL, LOST REVENUES OR PROFITS, WORK STOPPAGE, MODULE(S) FAILURE, IMPAIRMENT OF OTHER GOODS, COSTS OF REMOVAL AND REINSTALLATION OF THE MODULE(S), LOSS OF USE, INJURY TO PERSONS OR PROPERTY ARISING OUT OR RELATED TO THE MODULE(S). LG'S TOTAL LIABILITY, IF ANY, DAMAGES OR OTHERWISE, SHALL NOT EXCEED THE INVOICE VALUE PAID BY THE CUSTOMER FOR THE MODULE(S) OR SERVICE(S) FURNISHED, WHICH IS THE SUBJECT OF A CLAIM OR DISPUTE.

SOME STATES DO NOT ALLOW THE EXCLUSION OR LIMITATION OF INCIDENTAL OR CONSEQUENTIAL DAMAGES, OR ALLOW LIMITATIONS ON HOW LONG AN IMPLIED WARRANTY LASTS, SO THE ABOVE LIMITATIONS OR EXCLUSIONS MAY NOT APPLY TO YOU. THIS LIMITED WARRANTY GIVES THE CUSTOMER SPECIFIC LEGAL RIGHTS; CUSTOMERS MAY ALSO HAVE OTHER RIGHTS THAT VARY FROM STATE TO STATE.

6. Assertion of Claims

The assertion of claims under this Limited Warranty presupposes that the Customer has (i) informed the authorized reseller/distributor of our Module(s) in writing of the alleged claim, or that; (ii) this written notification has-been sent directly to the address stated in Section 7 below in the event that the authorized reseller/distributor no longer exists (e.g. due to discontinuance of business or bankruptcy). Any such assertion of claims must be accompanied by the original sales receipt as the proof of purchase and time of purchase of LG Module(s). The assertion of the claim must occur within thirty (30) days from the date that the claim is identified. The return of Module(s) may only occur after the written authorization of LG has been given.

7. Obtaining Warranty Performance

Customers who believe they have a justified claim covered by this Limited Warranty must immediately notify the authorized LG representative, or contact LG directly by writing to:

LG Electronics U.S.A. Inc

Solar Business Team

1000 Sylvan Ave. Englewood Cliffs, NJ 07632

Email : lg.solar@lge.com

Customer may also contact LG via its web-site at **www.lgsolarusa.com**.

8. Force Majeure

LG shall not be responsible or liable to Customer or any third party for any non-performance or delay in performance of any terms and conditions of sale, including this Limited Warranty, due to acts of God, war, strikes, riots, unavailability of suitable and sufficient labor, material, capacity, technical, yield failures or any other unforeseen event beyond LG's control, including, without limitations, any technological, physical event or condition which is not reasonably known or understood at the time of sale of the Module(s) or the claim.

9. Disputes

Except to the extent prohibited by applicable law, the Customer agrees she/he will not bring any action, regardless of form, arising out of or in any way connected with this Limited Warranty, more than one (1) year after the cause of action has occurred.

10. Severability

If a part, provision or section of this Limited Warranty, or its application to any person or circumstance is held invalid, void or unenforceable, such holding shall not affect this Limited Warranty and all other parts, provisions, clauses or applications shall remain, and, to this end, such other parts, provisions, clauses or applications of the Limited Warranty shall be treated as severable.

11. Validity

This Limited Warranty is valid from January 1, 2018 and shall apply to below Modules sold to specific Customer(s) on or after this date.

"LGxxxSxC-A5, LGxxxSxW-A5, LGxxxNxC-A5, LGxxxNxK-A5, LGxxxNxW-A5"

LG holds the right to amend the provisions, clauses or applications of this Limited Warranty from time to time without notice, however such changes would not be retrospective.

The City of SAN DIEGO

CITY OF SAN DIEGO
INSPECTION RECORD - SIMPLE PERMITS
Development Services Department
Division of Building Construction and Safety

9601 Ridgehaven Court, Suite 220
San Diego, Ca. 92123

Project Address: 5725 Soledad Mt Road

Scope of work:

Issue Date:

PMT # 3070181

- APPROVED DOCUMENTS, INCLUDING THE INSPECTION RECORD CARD, MUST BE AVAILABLE ON THE JOB SITE FOR ALL INSPECTIONS.
- EACH STAGE OF WORK SHALL BE LEFT EXPOSED FOR INSPECTION AND SHALL RECEIVE APPROVAL BEFORE COVERING.
- STORM WATER INSPECTIONS. Construction Storm Water Best Management Practices (BMPs) will be inspected and shall be maintained in accordance with all state and local requirements.
- Inspections shall be scheduled in advance by calling (858) 581-7111 from 7:00 a.m. to 10:00 p.m., or by visiting OpenDSD website at: www.sandiego.gov/development-services/opendsd/. Have approval number(s) available.

PERMIT TYPE	UNDERGROUND		ROUGH		FINAL	
	DATE	INSPECTOR	DATE	INSPECTOR	DATE	INSPECTOR
WATER HEATER (with tank)						
WATER/SANITARY REPAIR						
WATER SOFTENER						
PRESSURE REDUCING VALVE						
WATER / SEWER REPAIR						
DRAIN REPAIR						
PRESSURE REDUCING VALVE						
WALL FURNACE						
HEAT PUMP						
FAU / AC						
RESTORE GAS SERVICE						
GAS PIPING REPAIR						
SPLIT UNIT / HEAT PUMP						
TEMPORARY POWER						
EXHAUST FAN						
ELECTRIC VEHICLE CHARGER						
ELECTRICAL SERVICE						
ADDING CIRCUITS						
ROOFTOP SOLAR PV				P.V FINAL -	7/20/20	[illegible]

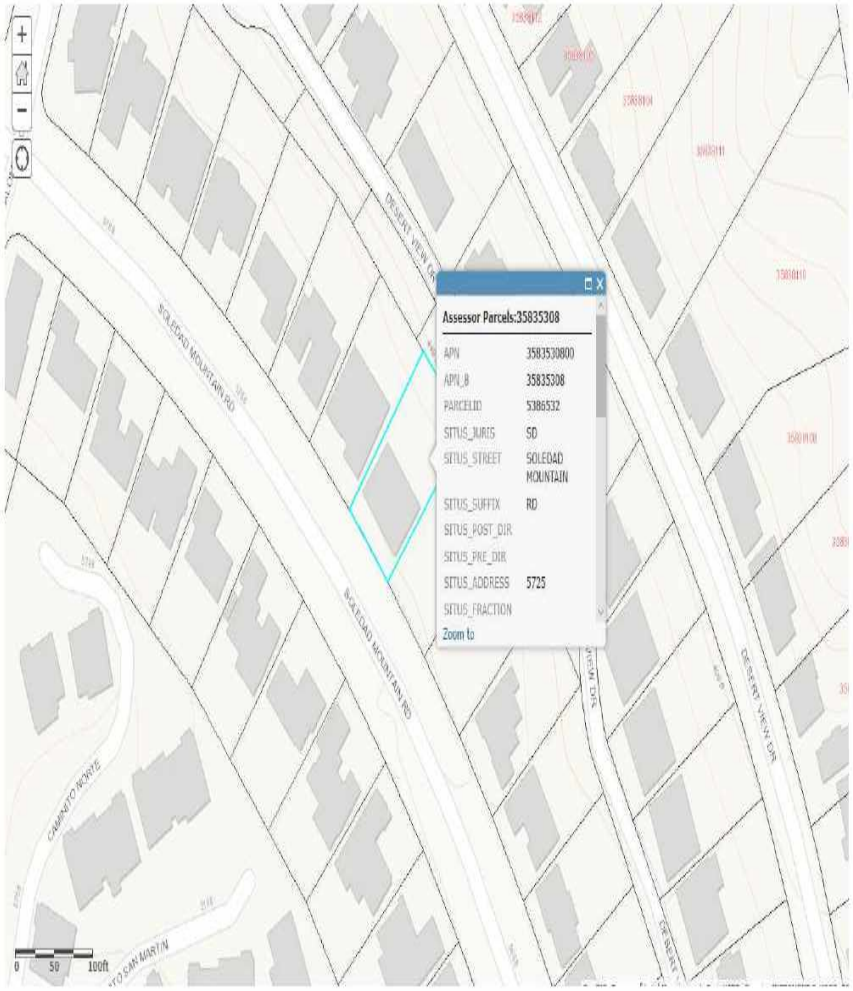

AZIMUTH: 16 MODULES @ 134°

ROOF PITCH: 3°

SUBDIVISION NAME: SOLEDAD CORONA ESTS UNIT # 3

MAP NO: 004473

LOT #: 210

YEAR BUILT: 2016

HOME SQUARE FOOTAGE: 10,500 SQFT.

SYSTEM INFORMATION

PV SYSTEM SIZE	5.60 kW	QTY
LG MODULE	LG350N1C-V5	16
SOLAR EDGE INVERTER	SE7600H-US	1
SOLAR EDGE POWER OPTIMIZER	P370	16
ENERGY STORAGE SIZE	**5 kW**	
TESLA	AC POWERWALL	1
TESLA	BACKUP GATEWAY	1

PROFESSIONAL CERTIFICATION FOR THE CITY OF SAN DIEGO PERMITTING PROCESS

The following plans have been prepared based on the City of San Diego's PV template and this Information Bulletin, that failure to comply with the requirements could result in final approval delays and that consistent noncompliance with the requirements will result in the loss of Professional Certification privileges.

CERTIFICATION, DECLARATION, AND ACKNOWLEDGEMENT

1) I hereby acknowledge that I am the responsible design professional for this project and that I am accountable for knowing and complying with the governing policies, regulations and code requirements applicable to this installation.
2) I hereby acknowledge that maintaining my Professional Certification privilege requires accurate plans and installations on a consistent basis.
3) As the responsible design professional, I have taken the Professional Certification class and have been placed on the approved list for plan review of Solar PV Professional Certification

With this submittal, I confirm that the plans and documents submitted for approval comply with the governing policies, regulations, and code requirements that are applicable to the proposed installation. I understand that, if installation deviates from the requirements in section IV (San Diego Information Bulletin 303), a construction change may be required and final approval will be delayed. I also understand that submitting inaccurate plans and installations may result in the revoation of my Professional Certification privilege for one year.

TED BAKER C10-858088

BAKER ELECTRIC HOME ENERGY

2120 HARMONY GROVE RD, ESCONDIDO, CA 92029
PHONE (760) 546-6000

TED BAKER
C10 & C46
LIC# 858088
EXP. 4/30/2021

SHEET INDEX:

-00- COVER AND PLOT MAP
-1- SITE PLAN
-2- SINGLE LINE DIAGRAM
-3- RACKING PLAN / DETAILS
-4- SYSTEM LABELS
-5- AS-BUILT

- ATTACHED SPEC. SHEETS / ETC. -
-- INVERTER
-- PV MODULE
-- GROUNDING LUG
-- MOUNTING / RACKING SYSTEM
-- TESLA AC POWERWALL SYSTEM

SCOPE OF WORK:

1) PROJECT IS A NEW INSTALLATION OF A PHOTOVOLTAIC SYSTEM WITH ENERGY STORAGE TO A RESIDENTIAL STRUCTURE.
2) THE NEW EQUIPMENT ADDED IS LISTED IN THE SYSTEM INFORMATION TABLE ON THIS COVER PAGE.
3) THE PV SYSTEM AND ENERGY STORAGE WILL BE CONNECTED TO A SINGLE-PHASE AC SERVICE PANEL OF NOMINAL 120/240 VAC, AND COMPLIES WITH THE PROVISIONS OF ARTICLE 480 AS PER 690.71.
4) THE TESLA AC POWERWALL IS THE ENERGY STORAGE SYSTEM THAT WILL INTERCONNECT ON A PROTECTED LOADS SUB PANEL FOR ESSENTIAL BACKUP LOADS.
5) MANUFACTURER'S INSTALLATION INSTRUCTIONS SHALL BE FOLLOWED PER 110.3(B) AND ELECTRICAL EQUIPMENT INSTALLED IN A NEAT AND WORKMANLIKE MANNER PER 110.12.

GENERAL NOTES:

1) THIS PROJECT SHALL COMPLY WITH THE 2019 CALIFORNIA ELECTRICAL CODE (CEC), THE 2019 CALIFORNIA BUILDING CODE (CBC), THE 2019 CALIFORNIA RESIDENTIAL CODE (CRC), 2017 NATIONAL ELECTRIC CODE (NEC). THE 2019 CALIFORNIA CODE OF REGULATIONS (CCR) TITLE 24 WHICH ADOPTS AND AMENDS THE 2018 INTERNATIONAL RESIDENTIAL CODE (IRC), 2018 INTERNATIONAL BUILDING CODE (IBC), TO THE 2019 CALIFORNIA PLUMBING CODE, AND 2019 CALIFORNIA ENERGY EFFICIENCY STANDARD.
2) DESIGN COMPLYING WITH THE LATEST EDITION OF THE SAN DIEGO COUNTY ELECTRICAL NEWSLETTERS, ALL LOCAL ORDINANCES AND POLICIES.
3) THIS INSTALLATION SHALL COMPLY WITH THE 2019 CRC SECTIONS R324.3.1 THROUGH R324.6, THE 2019 CFC SECTIONS 605.11.1 THROUGH 605.11.2, AND ARTICLE 690 OF THE 2017 NEC (NFPA 70).
4) THIS SYSTEM IS A UTILITY INTERACTIVE SYSTEM WITH ENERGY STORAGE.
5) THIS SYSTEM WILL NOT BE INTERCONNECTED UNTIL APPROVAL FROM THE LOCAL JURISDICTION AND THE UTILITY COMPANY ARE OBTAINED.
6) ACCESS AND WORKING SPACE WILL BE PROVIDED AS PER SECTION 110.26 CEC: SPACE ABOUT ELECTRICAL EQUIPMENT. AND SPACES ABOUT BATTERY SYSTEMS SHALL COMPLY WITH 110.26 AS PER 480.9(C).
7) THE INSTALLATION OF EQUIPMENT AND ALL ASSOCIATED WIRING AND INTERCONNECTIONS SHALL BE PERFORMED ONLY BY QUALIFIED PERSONS AS PER NEC 690.4(C)
8) A LADDER SHALL BE IN PLACE FOR INSPECTION IN COMPLIANCE WITH CAL-OSHA REGULATIONS. CONTRACTOR SHALL COMPLY WITH ALL OSHA REQUIREMENTS.

Eric Hoffman Residence 5725 Soledad Mountain Road, San Diego, CA 92037	ASSESSORS PARCEL NUMBER: 358 353 08 00	ISSUE: 05/18/2020	DRAWN BY: AL	EMAIL: eghoffman@hotmail.com PHONE: (415) 254-3742	PROJECT NO: S19192	00

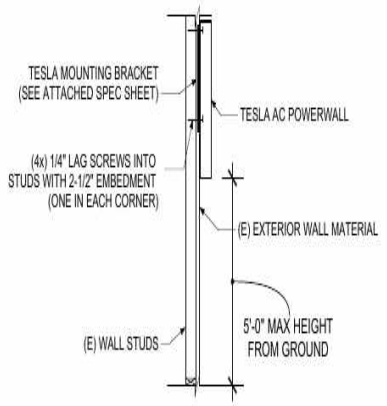

(A) EXTERIOR WALL MOUNTING DETAIL

SCALE: NTS

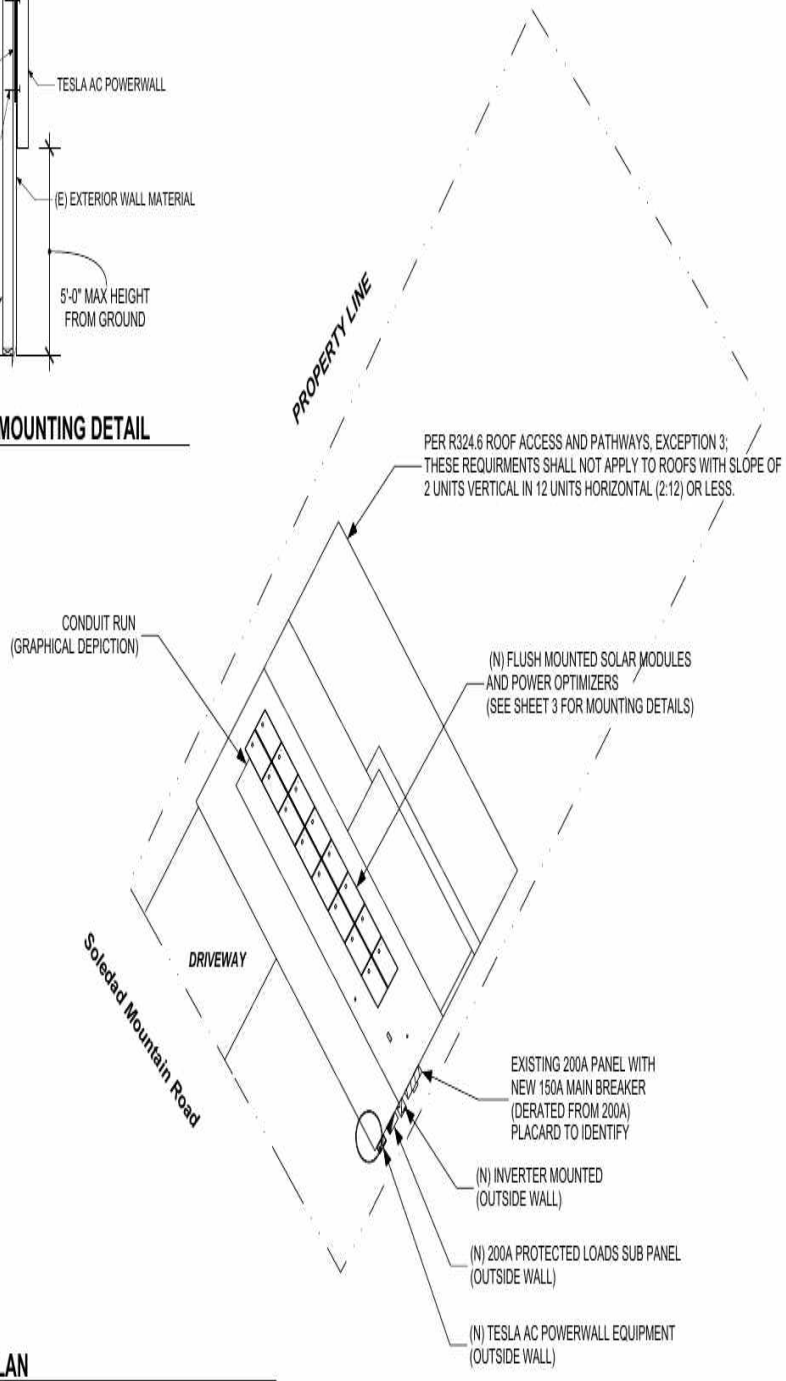

SITE PLAN

SCALE: 1" = 20'-0"

CONSTRUCTION NOTES:

1. THIS PROJECT HAS BEEN DESIGNED IN COMPLIANCE WITH THE CBC SECTION 1609 TO WITHSTAND A BASIC WIND SPEED OF 110 MPH (3 SECOND GUST), WIND EXPOSURE B.
2. THE HOUSE IS A TWO STORY STRUCTURE.
3. TESLA AC POWERWALL IS TO BE ATTACHED WITH THE POWERWALL MOUNTING BRACKET AND (4x) 1/4" LAG SCREWS WITH 2-1/2" EMBEDMENT. (SEE DETAIL A)
4. TESLA AC POWERWALL HAS BEEN EVALUATED TO ICC ACCEPTANCE CRITERIA AC156 FOR SEISMIC REQUIRMENTS.MANUFACTURER'S INSTALLATION METHODS COMPLY WITH THE RECOMMENDATIONS OF IEEE STANDARD 693-2005 FOR SEISMIC DESIGN.
5. THE ROOF MEMBERS ARE 2x10 RAFTERS @ 16" O.C.. CONNECTION TO STRUCTURE SHALL NOT BE WITHIN 6" OF NAILING PLATES.
6. THE SOLAR PHOTOVOLTAIC INSTALLATION SHALL NOT OBSTRUCT ANY PLUMBING, MECHANICAL OR BUILDING ROOF VENTS.
7. ALL CONDUCTORS AND CONDUITS MOUNTED ON ROOF SHALL BE MINIMUM 3 3/4" ABOVE ROOF SURFACE (INCLUDING CABLES UNDERNEATH MODULES AND RACKING). UTILIZING CADDY PYRAMID ST FIXED STRUT SUPPORTS (WHERE APPLICABLE).
8. ROOF ACCESS POINTS SHALL BE PROVIDED PER THE FOLLOWING (CRC R331.4.1, CBC 3111.4.1):
   - LOCATED IN AREAS NOT REQUIRING PLACEMENT OF GROUND LADDERS OVER OPENINGS SUCH AS DOORS OR WINDOWS.
   - LOCATED AT STRONG POINTS OF BUILDING CONSTRUCTION IN LOCATIONS WHERE ACCESS POINT DOES NOT CONFLICT WITH OVERHEAD OBSTRUCTIONS SUCH AS: TREE LIMBS, WIRES, OR SIGNS

AS THE HOMEOWNER OF THE SUBJECT PROJECT, I CERTIFY THAT I AM REQUESTING TO INSTALL THE SOLAR PHOTOVOLTAIC SHOWN ON THESE PLANS.

_____ HOME OWNER SIGNATURE _____ HOME OWNER'S NAME (PRINTED)

BAKER ELECTRIC HOME ENERGY
2120 HARMONY GROVE RD.
ESCONDIDO, CA 92029
PHONE (760) 340-0000

LICENSED PROFESSIONAL
TED BAKER
C10 & C46
LIC# 858088
EXP. 4/30/20

PHOTOVOLTAIC SYSTEM SIZE:
5.60 kW DC

ENERGY STORAGE SIZE:
5 kW

Hoffman Residence
5725 Soledad Mountain Road, San Diego, CA 92037
APN: 358 353 08 00

REVISIONS:

DRAWN BY:	AL
JOB NO:	S19192
DATE:	05/18/2020

SITE PLAN

SHEET: 1

120% RULE CALCUATIONS

1.) INVERTER OUTPUT (32A) + TESLA AC POWERWALL OUTPUT (20.83A)
x 125% + MAIN BREAKER (150A)= 216A
2.) 120% BUS RATING (200A) = 240A

THE VALUE OF 1.) IS LESS THAN OR EQUAL TO 2.)
DESIGN IS COMPLIANT SEE NOTE #1

ELECTRICAL NOTES:

1. THE PHOTOVOLTAIC CONNECTION IN THE PANEL BOARD SHALL BE POSITIONED AT THE OPPOSITE (LOAD) END FROM THE INPUT FEEDER LOCATION OR MAIN CIRCUIT LOCATION PER CEC ART. 690.64 WHEN USING THE 120% OF RATING ALLOWANCE FOR DETERMINING THE TOTAL RATING OF OVER CURRENT DEVICE AS PER 705.12(B)(2)(3)(b). A CONNECTION AT EITHER END, BUT NOT BOTH ENDS, OF A CENTER-FED PANEL BOARD IN DWELLINGS SHALL BE PERMITTED WHERE THE SUM OF 125 PERCENT OF THE POWER SOURCE(S) OUTPUT CIRCUIT CURRENT AND RATING OF THE OVERCURRENT DEVICE PROTECTING THE BUSBAR DOES NOT EXCEED 120 PERCENT OF THE CURRENT RATING OF THE BUSBAR AS PER 705.12(B)(2)(3)(d).
2. SOLAR CIRCUIT BREAKERS SHALL BE SUITABLE FOR BACKFEED. (CIRCUIT BREAKERS THAT ARE MARKED "LINE" AND "LOAD" ARE NOT SUITABLE FOR BACKFEED.)
3. LABELS ARE REQUIRED ON ALL INTERIOR AND EXTERIOR PHOTOVOLTAIC DC CONDUIT, RACEWAYS, ENCLOSURES AND CABLE ASSEMBLIES. LABEL SHALL READ "WARNING: PHOTOVOLTAIC POWER SOURCE" WITH A RED BACKGROUND, WHITE LETTERING, MINIMUM 3/8" LETTER HEIGHT, ALL CAPITAL LETTERS, ARIAL OR SIMILAR FONT, NON-BOLD, AND ON A RED BACKGROUND. THE MATERIALS USED SHALL BE REFLECTIVE, WEATHER RESISTANT AND SUITABLE FOR THE ENVIRONMENT. LABEL SHALL BE LOCATED AT EVERY 10 FEET OF CONDUIT, WITHIN 1' OF TURNS OR BENDS, WITHIN 1' ABOVE AND BELOW PENETRATIONS OF ROOF/CEILING ASSEMBLIES, WALLS, OR BARRIERS AND AT ALL PV COMBINER AND JUNCTION BOXES.
4. IDENTIFICATION FOR UNGROUNDED CONDUCTORS OF BRANCH CIRCUITS SUPPLIED FROM DIRECT-CURRENT SYSTEMS SHALL COMPLY WITH 210.5(C)(2)(a) AND (b). IDENTIFICATION AND GROUPING OF PHOTOVOLTAIC DC CIRCUITS SHALL COMPLY WITH NEC 690.31(B) AND SHALL BE SEPARATED FROM OTHER NON PV SYSTEM CONDUCTORS. PHOTOVOLTAIC SYSTEM GROUNDING COMPLIES WITH 690.41 & 690.35.
5. AUXILIARY GROUNDING IS PROVIDED FOR THE MOUNTING RAILS AT EACH ROW UTILIZING THE BURNDY WEEB-LUG 8.0 (UL 2703) AS PER CEC 690.47(D). PHOTOVOLTAIC SYSTEM GROUNDING COMPLIES WITH 690.41 & 690.35. EXPOSED NON-CURRENT CARRYING METAL PARTS OF PHOTOVOLTAIC RACKING, EQUIPMENT, AND CONDUCTOR ENCLOSURES SHALL BE GROUNDED IN ACCORDANCE TO NEC 690.47 (C)(3), 250.64(C), 250.86, & 250.134 OR 250.136(A), AND SIZED PER 250.166 REGARDLESS OF VOLTAGE. THE GEC / EGC SHALL BE CONTINUOUS, OR WHEN SPLICED, THE SPLICE SHALL BE MADE BY IRREVERSIBLE CRIMP PER NEC 250.64 (C)
6. EACH MODULE SHALL BE GROUNDED PER THE MANUFACTURER'S INSTRUCTIONS USING THE INTEGRATED BONDING MIDCLAMP / COMPONENTS (SEE SOLAR MOUNT SPEC SHEET), AND AT EACH ROW UTILIZING THE SUPPLIED GROUND LUG (UL 2703). SEE GROUNDING LUG SPEC SHEET.
7. IF THE EXISTING GROUNDING ELECTRODE SYSTEM CAN NOT BE VERIFIED, OR IS ONLY METALLIC WATER PIPING, OR IT HAS A RESISTANCE GREATER THAN 25 OHMS, IT IS THE CONTRACTOR'S RESPONSIBILITY TO INSTALL A SUPPLEMENTAL GROUNDING ELECTRODE AT LEAST 6' FROM THE EXISTING GROUNDING ELECTRODE.
8. ELECTRICAL EQUIPMENT INSTALLED SHALL BE LISTED, LABELED, OR CERTIFIED FOR ITS USE BY A NATIONALLY RECOGNIZED TESTING LABORATORY (NRTL).
9. INVERTER IS NEC 690.12 RAPID SHUTDOWN COMPLIANT; SEE SPECS. UPON TURNING OFF THE INTEGRATED DC DISCONNECT, AND/OR THE INVERTER OCPD AT THE MSP, THE PV CONDUCTORS SHUTDOWN WITHIN 30 SECONDS AS PER NEC 690.12(2)
10. THE ENERGY STORAGE DEVICE END OF THE CIRCUIT HAS AN OVERCURRENT DEVICE FOR DISCONNECTING MEANS PER 690.71(H)(1) AND IS WITHN SIGHT OF THE PV SYSTEM AC AND DC DISCONENCTING MEANS AS PER 690.71(H)(5) ; SINCE BOTH ARE INTERCONNECTED AT THE CRITICAL LOADS SUB PANEL. A SECOND DISCONNECTING MEANS ADJACENT TO THE MSP SHALL BE INSTALLED IF THE ENERGY STORAGE DEVICE IS IN THE GARAGE AND / OR NOT WITHIN VIEW OF THE MSP CONNECTED EQUIPMENT AS PER 690.71(H)(4).

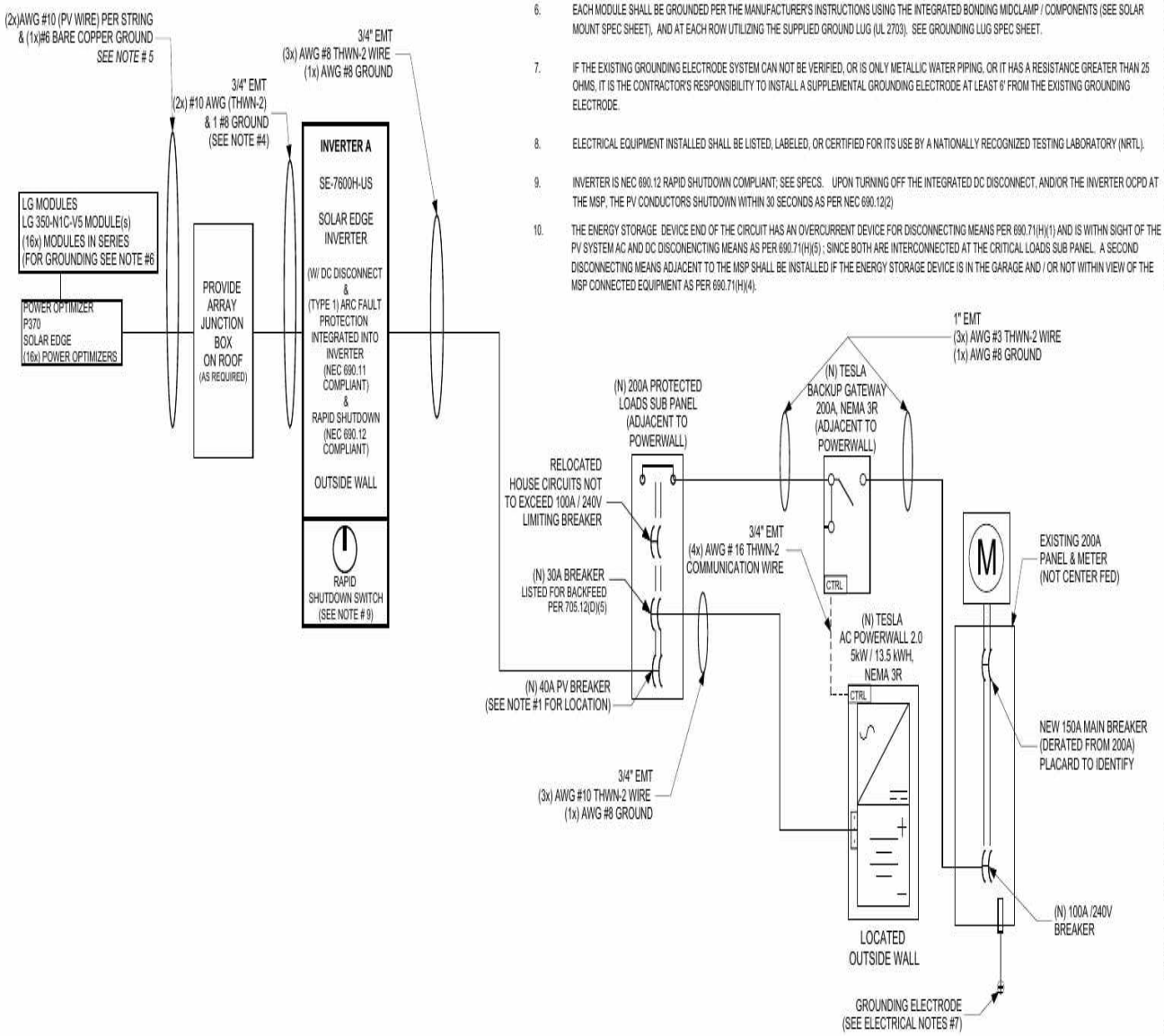

BAKER ELECTRIC HOME ENERGY
2120 HARMONY GROVE RD.
ESCONDIDO, CA 92029
PHONE (760) 545-0000

LICENSED PROFESSIONAL
TED BAKER
C10 & C46
LIC# 858088
EXP. 4/30/20

PHOTOVOLTAIC SYSTEM SIZE:
5.60 kW DC

ENERGY STORAGE SIZE:
5 kW

Hoffman Residence
5725 Soledad Mountain
Road, San Diego, CA 92037
APN: 358 353 08 00

REVISIONS:

DRAWN BY: AL
JOB NO: S19192
DATE: 05/18/2020

SINGLE LINE
DIAGRAM

SHEET: 2

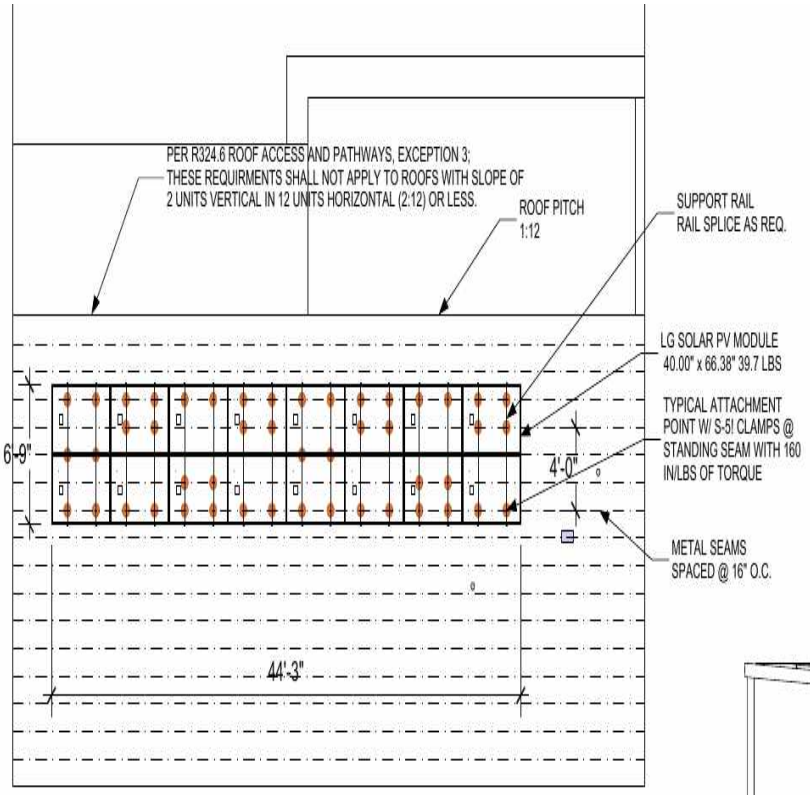

INSTALLATION NOTES:

1. DISTANCE BETWEEN S-5! CLAMPS NOT TO EXCEED 4'-0"
2. RAIL OVERHANG FROM S-5! CLAMPS NOT TO EXCEED 16"
3. S-5! CLAMPS SHALL BE SECURED TO MEATL SEAM WITH 160 IN/LBS OF TORQUE
4. ADJUSTMENTS MAY BE REQUIRED DUE TO EXISTING ROOF CONDITIONS.
5. THE COMBINATION OF MOUNTING SYSTEM AND PV MODULES SHALL MEET THE MINIMUM REQUIREMENTS TO ACHIEVE A CLASS "A" FIRE RATING PER UL 1703 FIRE CLASSIFICATION STANDARDS.

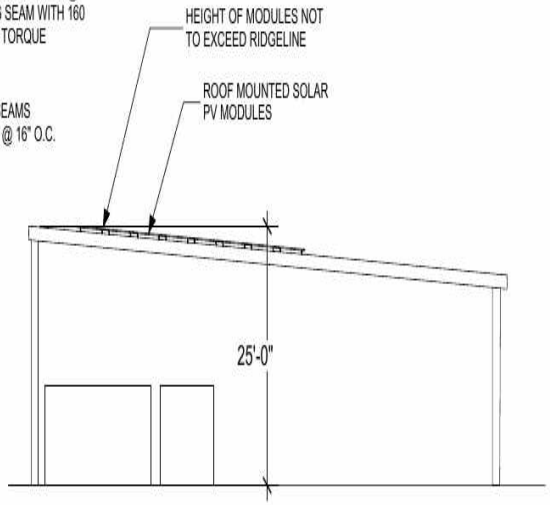

1 ENLARGED PARTIAL ROOF/RACKING PLAN

SCALE: 1/8" = 1'-0"

ELEVATION

SCALE: NTS

HOFFMAN - S19192	DEAD LOAD		
	Module	LG350N1C-V5	
	Weight	40.8	lbs
	Area (Module)	18.6	sq. ft.
	Length	66.93	in
	Width	40	in

	Quantity	Lbs. / Unit	Lbs. / Qty.
Module	16	40.8	652.8
P370	16	1.4	22.4
Midclamp	16	0.05	0.80
Endclamp	32	0.06	1.92
L-Foot	48	0.2	9.6
Rail	106.7	0.8	85.3
Tilt Leg	0	1.5	0.0
Splice bars	8	0.5	3.8
Footings	48	2.2	105.6
	Total Weight / Array	882.3	Lbs
	Total Area / Array	297.5	Sq.ft.
	Lbs. per SQFT	3.0	Lbs/sq.ft.
	Lbs. per Standoff	18.4	Lbs.

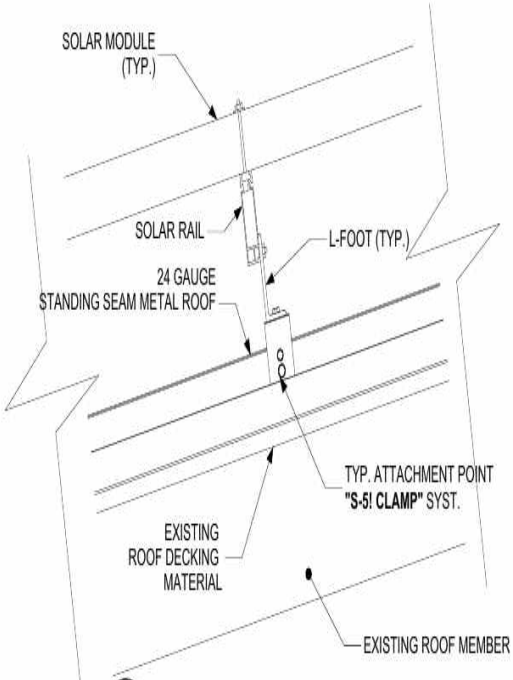

2 SOLAR MODULE MOUNTING DETAIL

SCALE: NTS

BAKER ELECTRIC HOME ENERGY
2120 HARMONY GROVE RD.
ESCONDIDO, CA 92029
PHONE (760) 340-0000

LICENSED PROFESSIONAL
TED BAKER
C10 & C46
LIC# 858088
EXP. 4/30/20

PHOTOVOLTAIC SYSTEM SIZE:
5.60 kW DC

ENERGY STORAGE SIZE:
5 kW

Hoffman Residence
5725 Soledad Mountain Road, San Diego, CA 92037
APN: 358 353 08 00

REVISIONS:

DRAWN BY: AL
JOB NO: S19192
DATE: 05/18/2020

RACKING PLAN / DETAILS

SHEET: 3

DIRECTORY PLACARD (BELOW)

⚠ CAUTION:

POWER TO THIS BUILDING IS ALSO SUPPLIED FROM THE FOLLOWING SOURCES WITH DISCONNECTS LOCATED AS SHOWN.

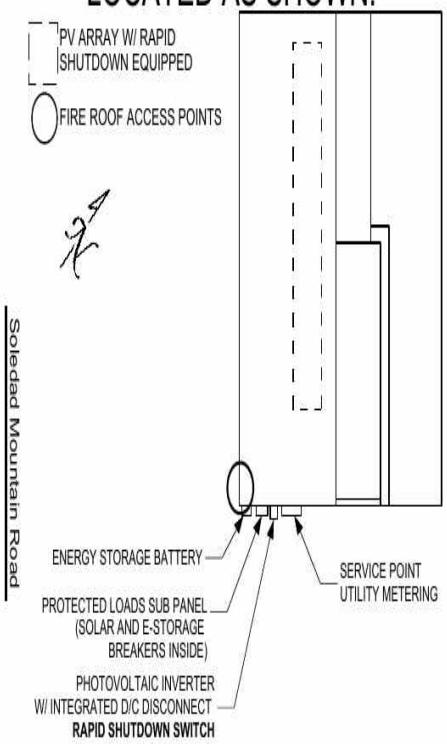

WARNING; TRI POWER SOURCES
SECOND SOURCE IS THE PV SYSTEM, THIRD IS ENERGY STORAGE

	PV SYSTEM	E-STORAGE
RATED AC OUTPUT CURRENT:	32 AMPS	20.83 AMPS
NOMINAL OPERATING AC VOLTAGE:	240 VOLTS	240 VOLTS

BAKER ELECTRIC
HOME ENERGY
760-546-6099

LOCATED AT MSP AS PER 690.56(B), 690.54, 705.10, 705.12(D)(3)

WARNING:
POWER SOURCE OUTPUT CONNECTION-
DO NOT RELOCATE THIS
OVERCURRENT DEVICE

LOCATED ADJACENT TO BACK-FED BREAKER AS PER 705.12(B)(2)(3)(b)

WARNING
ELECTRIC SHOCK HAZARD
TERMINALS ON THE LINE AND LOAD
SIDES MAY BE
ENERGIZED IN THE OPEN POSITION

LOCATED AT DC DISCONNECTING MEANS PER 690.13(B)

RAPID SHUTDOWN SWITCH
FOR SOLAR PV SYSTEM

LOCATED AT SWITH AS PER 690.56(C)3

SOLAR PV SYSTEM EQUIPPED WITH RAPID SHUTDOWN

TURN RAPID SHUTDOWN SWITCH TO THE "OFF" POSITION TO SHUT DOWN CONDUCTORS OUTSIDE THE ARRAY. CONDUCTORS WITHIN THE ARRAY REMAIN ENERGIZED IN SUNLIGHT

6" X 3½"

LOCATED AT MSP AS PER 690.56(C)(1)(b)

PERMANENT SIGNAGE NOTES:

1. ALL PLAQUES AND SIGNAGE REQUIRED BY THE LATEST EDITION OF THE CALIFORNIA ELECTRICAL CODE AND THE SAN DIEGO COUNTY AREA ELECTRICAL NEWSLETTER WILL BE INSTALLED AS REQUIRED.
2. ALTERNATE POWER SOURCE PLACARD SHALL BE METALLIC OR PLASTIC, ENGRAVED OR MACHINE PRINTED LETTERS IN A CONTRASTING COLOR TO THE PLAQUE. THIS PLAQUE WILL BE ATTCHED BY POP RIVETS OR SCREWS OR OTHER APPROVED METHOD.
3. DIRECTORY PLACARD MARKING CONTENT AND FORMAT: RED BACKGROUND, WHITE LETTERING, MINIMUM 3/8" LETTER HIEGHT, ALL CAPITAL LETTERS, ARIAL OR SIMILAR FONT, NON BOLD, REFLECTIVE WEATHER RESISTANT MATERIAL SUITABLE FOR THE ENVIRONMENT.
4. THE FOLLOWING WIRING METHODS AND ENCLOSURES THAT CONTAIN PV SYSTEM DC CIRCUIT CONDUCTORS SHALL BE MARKED WITH THE WORDING "WARNING: PHOTOVOLTAIC POWER SOURCE" BY MEANS OF PERMAMENTLY AFFIXED LABELS WITH SPACING BETWEEN LABELS NOT MORE THAN 10 FT. THE LABELS SHALL BE REFLECTIVE, AND ALL LETTERS SHALL BE CAPITALIZED AND SHALL BE A MINIMUM HEIGHT OF 3/8" IN WHITE ON A RED BACKGROUND. PV SYSTEM DC CIRCUIT LABELS SHALL APPEAR ON EVERY SECTION OF THE WIRING SYSTEM THAT IS SEPARATED BY ENCLOSURES, WALLS, PARTITIONS, CEILINGS, OR FLOORS.

SIGN @ INVERTER A

MAXIMUM VOLTAGE	480	VDC (Voc)
MAXIMUM CIRCUIT CURRENT	14.0	ADC (Imp)
MAXIMUM RATED OUTPUT CURRENT FROM THE POWER OPTIMIZER DC-TO-DC CONVERTERS	15	ADC (Isc)

PV SYSTEM DC DISCONNECT

LOCATED AT INVERTER AS PER 690.53, 690.13(B)

THIS MAIN SERVICE BREAKER
HAS BEEN DOWNSIZED TO 150A
NO UPSIZING PERMITTED

WARNING; TRI POWER SOURCES
SECOND SOURCE IS THE PV SYSTEM, THRID IS ENERGY STORAGE

	PV SYSTEM	E-STORAGE
RATED AC OUTPUT CURRENT:	32 AMPS	20.83 AMPS
NOMINAL OPERATING VOLTAGE:	240 VOLTS	240 VOLTS

LOCATED AT PROTECTED LOADS SUB PANEL AS PER 690.54

ESS DISCONNECT

NOMINAL VOLTAGE:	240 VOLTS
MAX SHORT-CIRCUIT CURRENT:	32 AMPS
ARC FLASH CLEARING TIME:	67 MS
DATE OF CALCULATION:	05/18/2020

LOCATED AT ENERGY STORAGE SYSTEM DISCONNET AS PER 706.7(D)

WARNING:

DO NOT ADD ADDITIONAL BREAKERS OR MAKE ANY CIRCUIT CONNECTIONS

LOCATED AT PROTECTED LOADS SUB PANEL

BAKER ELECTRIC HOME ENERGY
2120 HARMONY GROVE RD.
ESCONDIDO, CA 92029
PHONE (760) 546-6099

LICENSED PROFESSIONAL
TED BAKER
C10 & C46
LIC# 858088
EXP. 4/30/20

PHOTOVOLTAIC SYSTEM SIZE: 5.60 kW DC

ENERGY STORAGE SIZE: 5 kW

Hoffman Residence
5725 Soledad Mountain Road, San Diego, CA 92037
APN: 358 353 08 00

REVISIONS:

DRAWN BY:	AL
JOB NO:	S19192
DATE:	05/18/2020

SYSTEM LABELS

SHEET: 4

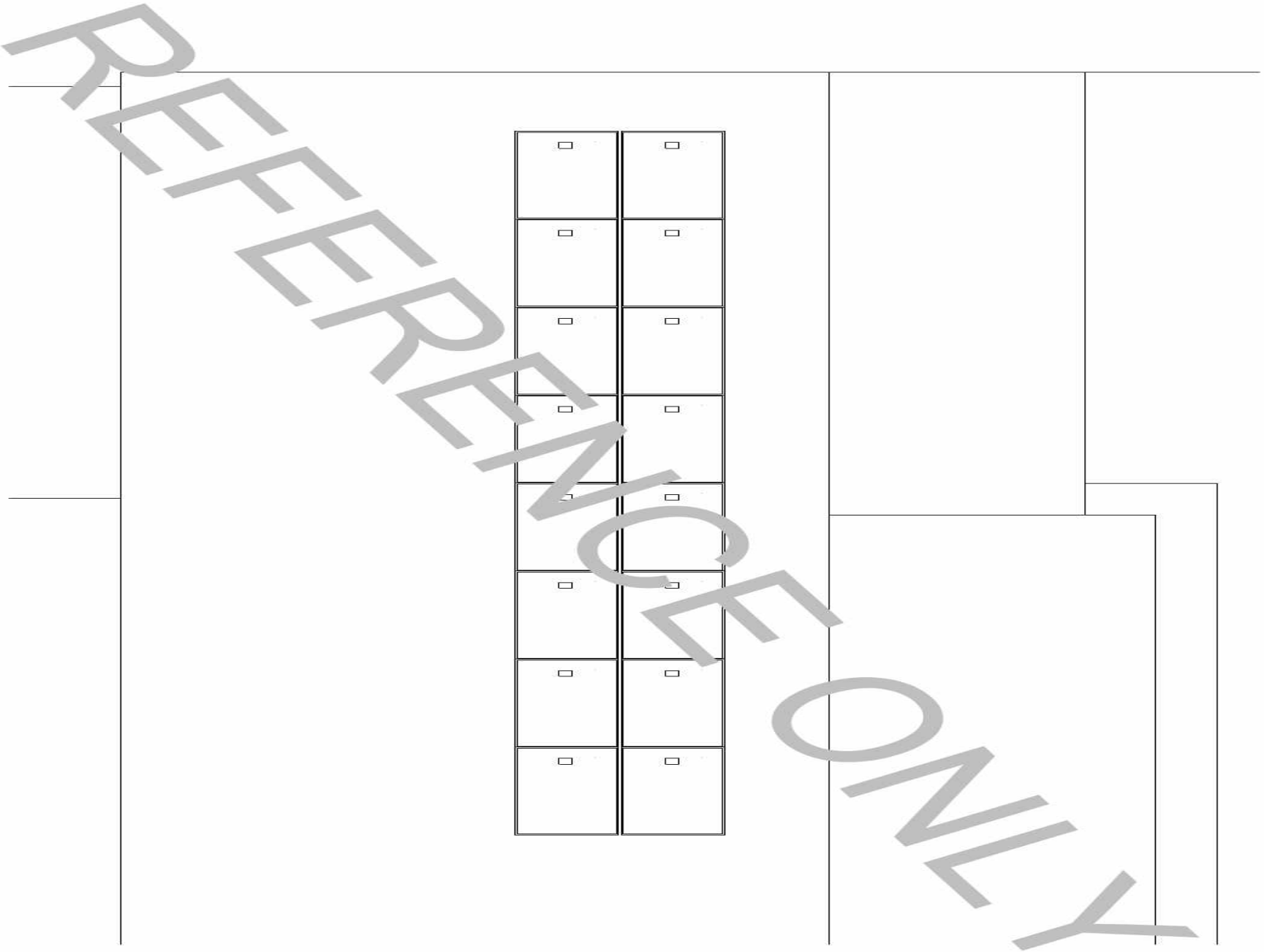

REFERENCE ONLY

Hoffman Residence

5725 Soledad Mountain
Road, San Diego, CA 92037
APN: 358 353 08 00

PHOTOVOLTAIC SYSTEM SIZE:
5.60 kW DC

ENERGY STORAGE SIZE:
5 kW

LICENSED PROFESSIONAL
TED BAKER
C10 & C46
LIC# 658088
EXP. 4/30/20

BAKER ELECTRIC
HOME ENERGY
2120 HARMONY GROVE RD.
ESCONDIDO, CA 92029
PHONE (760) 546-6000

REVISIONS:

DRAWN BY: AL
JOB NO: S19192
DATE: 05/18/2020

AS-BUILT

SHEET: 5

Baker Electric, inc. HOFFMAN - S19192 **Date:** 5/18/2020

4 Generations since 1938

Single Family Dwelling Electrical Service Load Calculation

1. General Lighting Loads

Dwelling	10500	sq. ft X 3 VA =		31500	VA
Small appliance loads -220-16(a) 1500 VA X			6 Circuits =	9000	VA
Laundry load - 220-16 (b) 1500 VA X			1 Circuits =	1500	VA
			General Lighting Total	**42,000**	**VA**

2. Cooking Equipment Loads - Nameplate Value

Range		Amps =	0	VA
Cooktop		Amps =	0	VA
Oven		Amps =	0	VA
		Cooking Equipment Total	**0**	**VA**

3. Electric Dryer 220-18 (Nameplate, 5000 VA minimum)

Dryer qty:		0	VA
	Dryer Total	**0**	**VA**

4. Fixed Appliance Loads

Dishwasher	@	10	Amps X 120	Volts =	1200	VA
Garbage Disposal	@	8	Amps X 120	Volts =	960	VA
Microwave	@	12	Amps X 120	Volts =	1440	VA
Water Heater	@	20	Amps X 240	Volts =	4800	VA
	@		Amps X 240	Volts =	0	VA
	@		Amps X 240	Volts =	0	VA
	@		Amps X 240	Volts =	0	VA
	@		Amps X 240	Volts =	0	VA
	@		Amps X 240	Volts =	0	VA
				Fixed Appliance Total	**8,400**	**VA**

5. **Subtotal (add all above lines)** **50,400 VA**

---

6. First 10,000 VA X 100%			10,000	VA
Remaining 40,400 VA X 40% =			16,160	VA
7. Larger of heating or AC Load (nameplate)	40	Amps =	9,600	VA
8. New Load For Vehicle Charger =		Amps =	0	VA
9. Total Load (from lines above)			35,760	VA

10. Existing Minimum Service Size = Total Load in VA = 149.00 Amps
240 volts

Homeowner: Eric Hoffman **Panel Rating:** 200 **Manufacturer:**

Address: 5725 Soledad Mountain Road **Main Breaker:** 150
San Diego, CA 92037

BAKER ELECTRIC HOME ENERGY
2120 HARMONY GROVE RD.
ESCONDIDO, CA 92029
PHONE (760) 340-5000

LICENSED PROFESSIONAL
TED BAKER
C10 & C46
LIC# 858088
EXP. 4/30/20

PHOTOVOLTAIC SYSTEM SIZE:
5.60 kW DC

ENERGY STORAGE SIZE:
5 kW

Hoffman Residence
5725 Soledad Mountain Road, San Diego, CA 92037
APN: 358 353 08 00

REVISIONS:

DRAWN BY: AL
JOB NO: S19192
DATE: 05/18/2020

LOAD CALCS

SHEET: 6

Single Phase Inverter with HD-Wave Technology

for North America

SE3000H-US / SE3800H-US / SE5000H-US / SE6000H-US / SE7600H-US / SE10000H-US / SE11400H-US

INVERTERS

12-25 YEAR WARRANTY

Optimized installation with HD-Wave technology

- Specifically designed to work with power optimizers
- Record-breaking efficiency
- Fixed voltage inverter for longer strings
- Integrated arc fault protection and rapid shutdown for NEC 2014 and 2017, per article 690.11 and 690.12
- UL1741 SA certified, for CPUC Rule 21 grid compliance
- Extremely small
- Built-in module-level monitoring
- Outdoor and indoor installation
- Optional: Revenue grade data, ANSI C12.20 Class 0.5 (0.5% accuracy)

solaredge.com

solaredge

Single Phase Inverter with HD-Wave Technology for North America

SE3000H-US / SE3800H-US / SE5000H-US / SE6000H-US/ SE7600H-US / SE10000H-US / SE11400H-US

	SE3000H-US	SE3800H-US	SE5000H-US	SE6000H-US	SE7600H-US	SE10000H-US	SE11400H-US	
OUTPUT								
Rated AC Power Output	3000	3800 @ 240V 3300 @ 208V	5000	6000 @ 240V 5000 @ 208V	7600	10000	11400 @ 240V 10000 @ 208V	VA
Maximum AC Power Output	3000	3800 @ 240V 3300 @ 208V	5000	6000 @ 240V 5000 @ 208V	7600	10000	11400 @ 240V 10000 @ 208V	VA
AC Output Voltage Min.-Nom.-Max. (211 - 240 - 264)	✓	✓	✓	✓	✓	✓	✓	Vac
AC Output Voltage Min.-Nom.-Max. (183 - 208 - 229)	-	✓	-	✓	-	-	✓	Vac
AC Frequency (Nominal)	*59.3 - 60 - 60.5[1]							Hz
Maximum Continuous Output Current @240V	12.5	16	21	25	32	42	47.5	A
Maximum Continuous Output Current @208V	-	16	-	24	-	-	48.5	A
GFDI Threshold	1							A
Utility Monitoring, Islanding Protection, Country Configurable Thresholds	Yes							
INPUT								
Maximum DC Power @240V	4650	5900	7750	9300	11800	15500	17650	W
Maximum DC Power @208V	-	5100	-	7750	-	-	15500	W
Transformer-less, Ungrounded	Yes							
Maximum Input Voltage	480							Vdc
Nominal DC Input Voltage	380				400			Vdc
Maximum Input Current @240V[2]	8.5	10.5	13.5	16.5	20	27	30.5	Adc
Maximum Input Current @208V[2]	-	9	-	13.5	-	-	27	Adc
Max. Input Short Circuit Current	45							Adc
Reverse-Polarity Protection	Yes							
Ground-Fault Isolation Detection	600kΩ Sensitivity							
Maximum Inverter Efficiency	99	99.2						%
CEC Weighted Efficiency	99						99 @ 240V 98.5 @ 208V	%
Nighttime Power Consumption	< 2.5							W
ADDITIONAL FEATURES								
Supported Communication Interfaces	RS485, Ethernet, ZigBee (optional), Cellular (optional)							
Revenue Grade Data, ANSI C12.20	Optional[3]							
Rapid Shutdown - NEC 2014 and 2017 690.12	Automatic Rapid Shutdown upon AC Grid Disconnect							
STANDARD COMPLIANCE								
Safety	UL1741, UL1741 SA, UL1699B, CSA C22.2, Canadian AFCI according to T.I.L. M-07							
Grid Connection Standards	IEEE1547, Rule 21, Rule 14 (HI)							
Emissions	FCC Part 15 Class B							
INSTALLATION SPECIFICATIONS								
AC Output Conduit Size / AWG Range	3/4" minimum / 14-6 AWG					3/4" minimum /14-4 AWG		
DC Input Conduit Size / # of Strings / AWG Range	3/4" minimum / 1-2 strings / 14-6 AWG					3/4" minimum / 1-3 strings / 14-6 AWG		
Dimensions with Safety Switch (HxWxD)	17.7 x 14.6 x 6.8 / 450 x 370 x 174					21.3 x 14.6 x 7.3 / 540 x 370 x 185		in / mm
Weight with Safety Switch	22 / 10		25.1 / 11.4	26.2 / 11.9		38.8 / 17.6		lb / kg
Noise	< 25				< 50			dBA
Cooling	Natural Convection							
Operating Temperature Range	-40 to +140 / -25 to +60[4] (-40°F / -40°C option)[5]							°F / °C
Protection Rating	NEMA 4X (Inverter with Safety Switch)							

[1] For other regional settings please contact SolarEdge support
[2] A higher current source may be used; the inverter will limit its input current to the values stated
[3] Revenue grade inverter P/N: SE6000H-US000NNC2
[4] For power de-rating information refer to: https://www.solaredge.com/sites/default/files/se-temperature-derating-note-na.pdf
[5] -40 version P/N: SE6000H-US000NNU4

© SolarEdge Technologies, Inc. All rights reserved. SOLAREDGE, the SolarEdge logo, OPTIMIZED BY SOLAREDGE are trademarks or registered trademarks of SolarEdge Technologies, Inc. All other trademarks mentioned herein are trademarks of their respective owners. Date: 12/2016/V01/ENG NAM. Subject to change without notice.

RoHS

intertek
Total Quality. Assured.

AUTHORIZATION TO MARK

This authorizes the application of the Certification Mark(s) shown below to the models described in the Product(s) Covered section when made in accordance with the conditions set forth in the Certification Agreement and Listing Report. This authorization also applies to multiple listee model(s) identified on the correlation page of the Listing Report.

This document is the property of Intertek Testing Services and is not transferable. The certification mark(s) may be applied only at the location of the Party Authorized To Apply Mark.

Applicant:	SolarEdge Technologies Ltd	**Manufacturer:**	Jabil Circuit (Guangzhou) LTD
Address:	1 HaMada Street Herzeliya 4673335	**Address:**	DEV EAST DISTRICT 128 JUN CHENG RD GUANGZHOU, GUANGDONG 510530
Country:	Israel	**Country:**	China
Contact:	Mr. Oren Bachar or Mr. Meir Adest	**Contact:**	Elaine Ouyang
Phone:	+972 9 957 6620 #293 or +972 9 957 6620 #131	**Phone:**	020-2805-4025/ 135-7023-5852
FAX:	972 9 957 6591	**FAX:**	N/A
Email:	OREB.B@SOLAREDGE.COM MEIR.A@SOLAREDGE.COM	**Email:**	Elaine.ouyang@jabil.com

Party Authorized To Apply Mark: Same as Manufacturer
Report Issuing Office: Cortland NY 13045

Control Number: *4004590* **Authorized by:**

Ulla-Pia Johansson-Nilsson
for Dean Davidson, Certification Manager

C ETL LISTED US
Intertek

This document supersedes all previous Authorizations to Mark for the noted Report Number.

This Authorization to Mark is for the exclusive use of Intertek's Client and is provided pursuant to the Certification agreement between Intertek and its Client. Intertek's responsibility and liability are limited to the terms and conditions of the agreement. Intertek assumes no liability to any party, other than to the Client in accordance with the agreement, for any loss, expense or damage occasioned by the use of this Authorization to Mark. Only the Client is authorized to permit copying or distribution of this Authorization to Mark and then only in its entirety. Use of Intertek's Certification mark is restricted to the conditions laid out in the agreement and in this Authorization to Mark. Any further use of the Intertek name for the sale or advertisement of the tested material, product or service must first be approved in writing by Intertek. Initial Factory Assessments and Follow-up Services are for the purpose of assuring appropriate usage of the Certification mark in accordance with the agreement, they are not for the purposes of production quality control and do not relieve the Client of their obligations in this respect.

Intertek Testing Services NA Inc.
545 East Algonquin Road, Arlington Heights, IL 60005
Telephone 800-345-3851 or 847-439-5667 Fax 312-283-1672

Standard(s):	Inverters, Converters, Controllers And Interconnection System Equipment For Use With Distributed Energy Resources [UL 1741:2010 Ed.2(Supplement SA)+R:07Sep2016] Power Conversion Equipment [CSA C22.2#107.1:2016 Ed.4]. UL SUBJECT 1699B Issued: 2013/01/14 Ed: 2 Outline of Investigation for Photovoltaic (PV) DC ARC-Fault Circuit Protection
Product:	Grid support Utility Interactive Inverter - Non Isolated Photovoltaic Inverter with MPPT function and Rapid
Brand Name:	SolarEdge
Models:	SE3000H-US, SE3800H-US, SE5000H-US, SE6000H-US, SE7600H-US, SE10000H-US and SE11400H-US

intertek
Total Quality. Assured.

AUTHORIZATION TO MARK

This authorizes the application of the Certification Mark(s) shown below to the models described in the Product(s) Covered section when made in accordance with the conditions set forth in the Certification Agreement and Listing Report. This authorization also applies to multiple listee model(s) identified on the correlation page of the Listing Report.

This document is the property of Intertek Testing Services and is not transferable. The certification mark(s) may be applied only at the location of the Party Authorized To Apply Mark.

Applicant:	SolarEdge Technologies Ltd	**Manufacturer:**	Celestica Romania
Address:	1 HaMada Street Herzeliya 4673335	**Address:**	88 Soseaua Borsului, Bors, Bihor county, 417075
Country:	Israel	**Country:**	Romania
Contact:	Mr. Oren Bachar or Mr. Meir Adest	**Contact:**	Renata Bodan
Phone:	+972 9 957 6620 #293 or +972 9 957 6620 #131	**Phone:**	+40-359-403-661
FAX:	972 9 957 6591	**FAX:**	+40-722-964-215
Email:	OREB.B@SOLAREDGE.COM MEIR.A@SOLAREDGE.COM	**Email:**	rbodan@celestica.com

Party Authorized To Apply Mark: Same as Manufacturer
Report Issuing Office: Cortland NY 13045

Control Number: *4004590* **Authorized by:**

Ulla-Pia Johansson-Nilsson
for Dean Davidson, Certification Manager

C ETL LISTED US
Intertek

This document supersedes all previous Authorizations to Mark for the noted Report Number.

This Authorization to Mark is for the exclusive use of Intertek's Client and is provided pursuant to the Certification agreement between Intertek and its Client. Intertek's responsibility and liability are limited to the terms and conditions of the agreement. Intertek assumes no liability to any party, other than to the Client in accordance with the agreement, for any loss, expense or damage occasioned by the use of this Authorization to Mark. Only the Client is authorized to permit copying or distribution of this Authorization to Mark and then only in its entirety. Use of Intertek's Certification mark is restricted to the conditions laid out in the agreement and in this Authorization to Mark. Any further use of the Intertek name for the sale or advertisement of the tested material, product or service must first be approved in writing by Intertek. Initial Factory Assessments and Follow-up Services are for the purpose of assuring appropriate usage of the Certification mark in accordance with the agreement, they are not for the purposes of production quality control and do not relieve the Client of their obligations in this respect.

Intertek Testing Services NA Inc.
545 East Algonquin Road, Arlington Heights, IL 60005
Telephone 800-345-3851 or 847-439-5667 Fax 312-283-1672

Standard(s):	Inverters, Converters, Controllers And Interconnection System Equipment For Use With Distributed Energy Resources [UL 1741:2010 Ed.2(Supplement SA)+R:07Sep2016] Power Conversion Equipment [CSA C22.2#107.1:2016 Ed.4]. UL SUBJECT 1699B Issued: 2013/01/14 Ed: 2 Outline of Investigation for Photovoltaic (PV) DC ARC-Fault Circuit Protection
Product:	Grid support Utility Interactive Inverter - Non Isolated Photovoltaic Inverter with MPPT function and Rapid
Brand Name:	SolarEdge
Models:	SE3000H-US, SE3800H-US, SE5000H-US, SE6000H-US, SE7600H-US, SE10000H-US and SE11400H-US

Power Optimizer

For North America

P320 / P340 / P370 / P400 / P405 / P505

POWER OPTIMIZER

PV power optimization at the module-level

- Specifically designed to work with SolarEdge inverters
- Up to 25% more energy
- Superior efficiency (99.5%)
- Mitigates all types of module mismatch losses, from manufacturing tolerance to partial shading
- Flexible system design for maximum space utilization
- Fast installation with a single bolt
- Next generation maintenance with module-level monitoring
- Meets NEC requirements for arc fault protection (AFCI) and Photovoltaic Rapid Shutdown System (PVRSS)
- Module-level voltage shutdown for installer and firefighter safety

solaredge.com

solaredge

Power Optimizer

For North America

P320 / P340 / P370 / P400 / P405 / P505

Optimizer model (typical module compatibility)	P320 (for 60-cell modules)	P340 (for high-power 60-cell modules)	P370 (for higher-power 60 and 72-cell modules)	P400 (for 72 & 96-cell modules)	P405 (for thin film modules)	P505 (for higher current modules)	
INPUT							
Rated Input DC Power[1]	320	340	370	400	405	505	W
Absolute Maximum Input Voltage (Voc at lowest temperature)	48		60	80	125[2]	83[2]	Vdc
MPPT Operating Range	8 - 48		8 - 60	8 - 80	12.5 - 105	12.5 - 83	Vdc
Maximum Short Circuit Current (Isc)	11			10.1		14	Adc
Maximum DC Input Current	13.75			12.63		17.5	Adc
Maximum Efficiency	99.5						%
Weighted Efficiency	98.8					98.6	%
Overvoltage Category	II						
OUTPUT DURING OPERATION (POWER OPTIMIZER CONNECTED TO OPERATING SOLAREDGE INVERTER)							
Maximum Output Current	15						Adc
Maximum Output Voltage	60				85		Vdc
OUTPUT DURING STANDBY (POWER OPTIMIZER DISCONNECTED FROM SOLAREDGE INVERTER OR SOLAREDGE INVERTER OFF)							
Safety Output Voltage per Power Optimizer	1 ± 0.1						Vdc
STANDARD COMPLIANCE							
EMC	FCC Part15 Class B, IEC61000-6-2, IEC61000-6-3						
Safety	IEC62109-1 (class II safety), UL1741						
RoHS	Yes						
INSTALLATION SPECIFICATIONS							
Maximum Allowed System Voltage	1000						Vdc
Compatible inverters	All SolarEdge Single Phase and Three Phase inverters						
Dimensions (W x L x H)	129 x 153 x 27.5 / 5.1 x 6 x 1.1			128 x 153 x 33.5 / 5.1 x 6 x 1.3	129 x 159 x 49.5 / 5.1 x 6.3 x 1.9	129 x 162 x 59 / 5.1 x 6.4 x 2.3	mm / in
Weight (including cables)	630 / 1.4			750 / 1.7	845 / 1.9	1064 / 2.3	gr / lb
Input Connector	MC4[3]						
Output Wire Type / Connector	Double Insulated; MC4						
Output Wire Length	0.95 / 3.0		1.2 / 3.9				m / ft
Input Wire Length	0.16 / 0.52						m / ft
Operating Temperature Range	-40 - +85 / -40 - +185						°C / °F
Protection Rating	IP68 / NEMA6P						
Relative Humidity	0 - 100						%

[1] Rated STC power of the module. Module of up to +5% power tolerance allowed
[2] NEC 2017 requires max input voltage be not more than 80V
[3] For other connector types please contact solaredge

PV System Design Using a SolarEdge Inverter[4,5,6,7]		Single Phase HD-Wave	Single phase	Three Phase 208V	Three Phase 480V	
Minimum String Length (Power Optimizers)	P320, P340, P370, P400	8		10	18	
	P405 / P505	6		8	14	
Maximum String Length (Power Optimizers)		25		25	50[8]	
Maximum Power per String		5700 (6000 with SE7600-US - SE11400-US)	5250	6000[9]	12750[10]	W
Parallel Strings of Different Lengths or Orientations		Yes				

[4] For detailed string sizing information refer to: http://www.solaredge.com/sites/default/files/string_sizing_na.pdf
[5] It is not allowed to mix P405/P505 with P320/P340/P370/P400 in one string
[6] A string with more than 30 optimizers does not meet NEC rapid shutdown requirements; safety voltage will be above the 30V requirement
[7] For SE14K/SE15K/SE43.2K/US: it is allowed to install up to 6,500W per string when 3 strings are connected to the inverter (3 strings per unit for SE43.2K/US) and when the maximum power difference between the strings is up to 1,000W
[8] For SE30K/US/SE33.3K/US/SE38.6K/US/SE100K/US: it is allowed to install up to 15,000W per string when 3 strings are connected to the inverter (3 strings per unit for SE66.6K/US/SE100K/US) and when the maximum power difference between the strings is up to 2,000W

© SolarEdge Technologies Ltd. All rights reserved. SOLAREDGE, the SolarEdge logo, OPTIMIZED BY SOLAREDGE are trademarks or registered trademarks of SolarEdge Technologies, Inc. All other trademarks mentioned herein are trademarks of their respective owners. Date: 12/2018/V01/ENG NAM. Subject to change without notice.

CE RoHS

LG NeON®2

LG350N1C-V5

60

350W

The LG NeON® 2 is LG's best selling solar module, and is one of the most powerful and versatile modules on the market today. Featuring LG's Cello Technology, the LG NeON® 2 increases power output. New updates include an extended performance warranty from 86% to 90.08% to give customers higher performance and reliability.

25 YEAR PARTS • PERFORMANCE • LABOR WARRANTY

Features

Enhanced Performance Warranty

LG NeON® 2 has an enhanced performance warranty. After 25 years, LG NeON® 2 is guaranteed at least 90.08% of initial performance.

Enhanced Product Warranty

LG has extended the warranty of the NeON® 2 to 25 years including labor, which is top level in the industry.

Better Performance on a Sunny Day

LG NeON® 2 now performs better on sunny days, thanks to its improved temperature coefficient.

Roof Aesthetics

LG NeON® 2 has been designed with aesthetics in mind using thinner wires that appear all black at a distance. The LG NeON® 2 can increase the aesthetic value of your home with a more modern design.

When you go solar, ask for the brand you can trust: LG Solar

About LG Electronics

LG Electronics is a global leader in electronic products in the clean energy markets by offering solar PV panels and energy storage systems. The company first embarked on a solar energy source research program in 1985, supported by LG Group's vast experience in the semi-conductor, LCD, chemistry and materials industries. In 2010, LG Solar successfully released its first Mono® series to the market, which is now available in 32 countries. The NeON® (previous Mono®) NeON, NeON®2, NeON®2 BiFacial won the "Intersolar AWARD" in 2013, 2015 and 2016, which demonstrates LG's leadership and innovation in the solar industry.

LG Solar

LG NeON®2

LG350N1C-V5

General Data

Cell Properties (Material/Type)	Monocrystalline/N-type
Cell Maker	LG
Cell Configuration	60 Cells (6 x 10)
Number of Busbars	12EA
Module Dimensions (L x W x H)	1,686mm x 1,016mm x 40 mm
Weight	17.1 kg
Glass (Material)	Tempered Glass with AR Coating
Backsheet (Color)	White
Frame (Material)	Anodized Aluminum
Junction Box (Protection Degree)	IP 68 with 3 Bypass Diodes
Cables (Length)	1,000mm x 2EA
Connector (Type/Maker)	MC 4/MC

Certifications and Warranty

Certifications	IEC 61215-1/-1-1/2:2016, IEC 61730-1/2:2016, UL 1703
	ISO 9001, ISO 14001, ISO 50001
	OHSAS 18001
Salt Mist Corrosion Test	IEC 61701:2012 Severity 6
Ammonia Corrosion Test	IEC 62716:2013
Fire Rating	Class C (UL 790)
Solar Module Product Warranty	25 Years
Solar Module Output Warranty	Linear Warranty*

*Improved: 1st year 98%, from 2~24th year: 0.33%/year down, after 25th year: 90.08%

Temperature Characteristics

NMOT*	[°C]	42 ± 3
Pmax	[%/°C]	-0.36
Voc	[%/°C]	-0.27
Isc	[%/°C]	0.03

*NMOT (Nominal Module Operating Temperature) Irradiance 800 W/m2, Ambient temperature 20 °C, Wind speed 1 m/s, Spectrum AM 1.5

Electrical Properties (NMOT)

Model		LG350N1C-V5
Maximum Power (Pmax)	[W]	261
MPP Voltage (Vmpp)	[V]	33.0
MPP Current (Impp)	[A]	7.91
Open Circuit Voltage (Voc)	[V]	38.80
Short Circuit Current (Isc)	[A]	8.53

I-V Curves

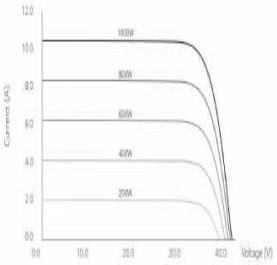

Electrical Properties (STC*)

Model		LG350N1C-V5
Maximum Power (Pmax)	[W]	350
MPP Voltage (Vmpp)	[V]	35.3
MPP Current (Impp)	[A]	9.92
Open Circuit Voltage (Voc ± 5%)	[V]	41.3
Short Circuit Current (Isc ± 5%)	[A]	10.61
Module Efficiency	[%]	20.4
Power Tolerance	[%]	0 ~ +3

*STC (Standard Test Condition) Irradiance 1000 W/m², cell temperature 25 °C, AM 1.5, Measure Tolerance ±3%

Operating Conditions

Operating Temperature	[°C]	-40 ~ +90
Maximum System Voltage	[V]	1,000 (UL), 1000 (IEC)
Maximum Series Fuse Rating	[A]	20
Mechanical Test Load* (Front)	[Pa/psf]	5,400/113
Mechanical Test Load* (Rear)	[Pa/psf]	4,000/84

*Mechanical Test Loads 5,400 Pa/4,000 Pa based on IEC 61215-2 : 2016
(Test Load = Design Load x Safety Factor (1.5))

Packaging Configuration

Number of Modules per Pallet	[EA]	25
Number of Modules per 40ft HQ Container	[EA]	650
Packaging Box Dimensions (L x W x H)	[mm]	1,750 x 1,120 x 1,221
Packaging Box Gross Weight	[kg]	464

Dimensions (mm/inch)

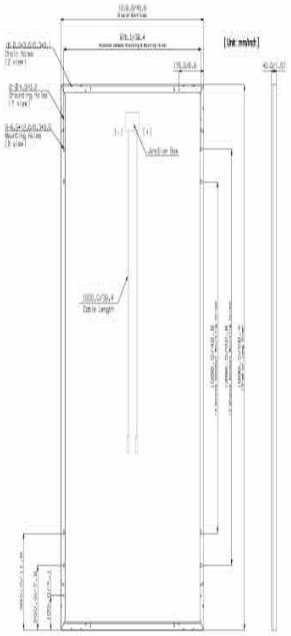

LG Life's Good

LG Electronics Inc.
Solar Business Division
2000 Millbrook Drive
Lincolnshire, IL 60069

www.lg-solar.com

Product specifications are subject to change without notice.
LG350N1C-V5.pdf

© 2019 LG Electronics. All rights reserved.

CERTIFICATE OF COMPLIANCE

Certificate Number 20190708-E329725
Report Reference E329725-20180820
Issue Date 2019-JULY-08

Issued to: LG ELECTRONICS INC
168 Suchul-daero,
Gumi-si Gyeongsangbuk-do 39368 KOREA

This certificate confirms that representative samples of PHOTOVOLTAIC MODULES AND PANELS WITH SYSTEM VOLTAGE RATINGS OVER 600 VOLTS

Refer Addendum Page For Models/Product

Have been investigated by UL in accordance with the Standard(s) indicated on this Certificate.

Standard(s) for Safety: "Standard for Safety for Flat-Plate Photovoltaic Modules and Panels", UL 1703 – Standard for Flat-Plate Photovoltaic Modules and Panels, 3rd Edition, dated March 15, 2002, contains revisions through and including September 26, 2018 and ULC/ORD-C1703:2018 - Flat-Plate Photovoltaic Modules and Panels

Additional Information: See the UL Online Certifications Directory at https://iq.ulprospector.com for additional information.

This *Certificate of Compliance* does not provide authorization to apply the UL Mark. Only the UL Follow-Up Services Procedure provides authorization to apply the UL Mark.

Only those products bearing the UL Mark should be considered as being UL Certified and covered under UL's Follow-Up Services.

Look for the UL Certification Mark on the product.

Bruce Mahrenholz, Director North American Certification Program

UL LLC

Any information and documentation involving UL Mark services are provided on behalf of UL LLC (UL) or any authorized licensee of UL. For questions, please contact a local UL Customer Service Representative at http://ul.com/aboutul/locations/

CERTIFICATE OF COMPLIANCE

Certificate Number 20190708-E329725
Report Reference E329725-20180820
Issue Date 2019-JULY-08

This is to certify that representative samples of the product as specified on this certificate were tested according to the current UL requirements.

PRODUCT COVERED: Photovoltaic modules

Models:

USL, CNL - Photovoltaic modules,

Series LGxxxN2W-V5 for using Mono-Crystalline cell (6x12 cells);

LG380N2W-V5, LG385N2W-V5, LG390N2W-V5, LG395N2W-V5, LG400N2W-V5, LG405N2W-V5, LG410N2W-V5, LG415N2W-V5, LG420N2W-V5, LG425N2W-V5

Series LGxxxN1C-V5 for using Mono-Crystalline cell (6x10 cells);

LG310N1C-V5, LG315N1C-V5, LG320N1C-V5, LG325N1C-V5, LG330N1C-V5, LG333N1C-V5, LG335N1C-V5, LG340N1C-V5, LG345N1C-V5, LG350N1C-V5, LG355N1C-V5

Series LGxxxN1W-V5 for using Mono-Crystalline cell (6x10 cells);

LG310N1W-V5, LG315N1W-V5, LG320N1W-V5, LG325N1W-V5, LG330N1W-V5, LG333N1W-V5, LG335N1W-V5, LG340N1W-V5, LG345N1W-V5, LG350N1W-V5, LG355N1W-V5

Series LGxxxN1K-V5 for using Mono-Crystalline cell (6x10 cells);

LG310N1K-V5, LG315N1K-V5, LG320N1K-V5, LG325N1K-V5, LG330N1K-V5, LG335N1K-V5, LG340N1K-V5, LG345N1K-V5, LG350N1K-V5, LG355N1K-V5

Bifacial Series LGxxxN2T-V5 for using Mono-Crystalline cell (6x12 cells);

LG385N2T-V5, LG390N2T-V5, LG395N2T-V5, LG400N2T-V5, LG410N2T-V5, LG415N2T-V5, LG420N2T-V5, LG425N2T-V5, LG430N2T-V5

Bifacial Series LGxxxN2T-J5 for using Mono-Crystalline cell (6x12 cells);

LG385N2T-J5, LG390N2T-J5, LG395N2T-J5, LG400N2T-J5, LG405N2T-J5

Bifacial Series LGxxxN1T-V5 for using Mono-Crystalline cell (6x10 cells);

LG310N1T-V5, LG315N1T-V5, LG320N1T-V5, LG325N1T-V5, LG330N1T-V5, LG335N1T-V5, LG340N1T-V5

Bruce Mahrenholz, Director North American Certification Program

UL LLC

Any information and documentation involving UL Mark services are provided on behalf of UL LLC (UL) or any authorized licensee of UL. For questions, please contact a local UL Customer Service Representative at http://ul.com/aboutul/locations/

S-5!®

The Right Way!

LISTED

S-5-PV Kit and EdgeGrab™

The concept of combining photovoltaic arrays with standing seam metal roofing is growing—and for good reasons. A standing seam metal roof has a life expectancy consistent with that of framed PV modules. A 30-year power source on a 40-year roof, along with zero-penetration technology, creates the most sustainable roof system available with alternative power generation, all without compromising the roof manufacturer's warranty!

The new S-5-PV Kit boasts an important breakthrough in PV mounting technology. It is one of the first solar module mounting solutions in the industry to be listed to the new UL subject 2703, a standard that covers both bonding and mounting. Furthermore, the S-5!® Mounting Disk has gained an ETL Listing to UL 1703.*

The S-5-PV Kit features a groundbreaking new stainless steel mounting disk with twelve nodes designed to ensure the module-to-module conductivity of anodized aluminum module frames. This means it automatically provides a ground path in the module frame. No lugs or wire required except to connect one string of modules to another and to ground the system. This connection detail represents installed electrical cost savings of $6-$12 per unit. In most cases, the savings in time and materials is sufficient to pay for the entire S-5-PV Kit and clamp setup.

The right way to attach almost anything to metal roofs!

S-5-PV Kit and EdgeGrab™

888-825-3432 | www.S-5.com |

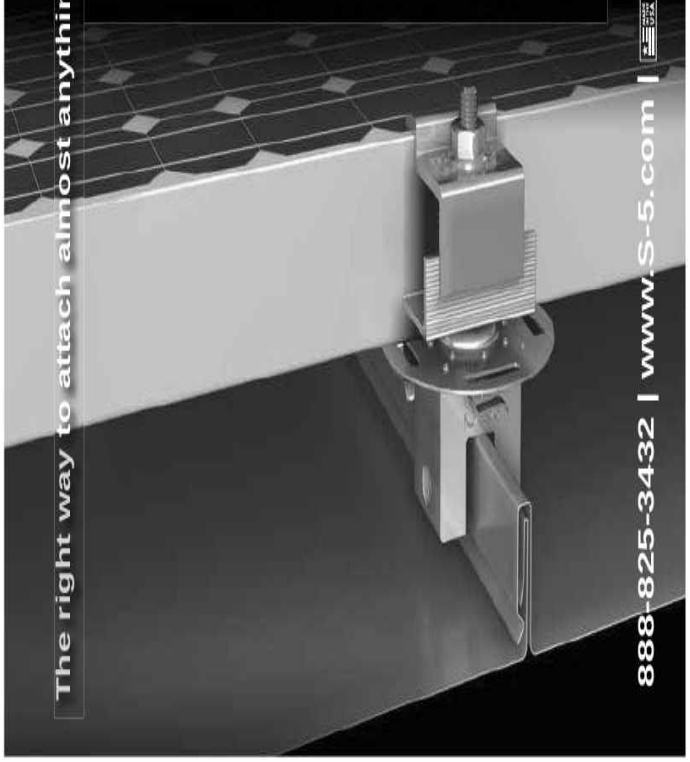

S-5!®

The Right Way!

The S-5-PV Kit is a revolutionary new solution to attach solar PV panels to standing seam metal roofs!

The **S-5-PV Kit** is furnished with the hardware shown at right, excluding the attachment clamp, which is supplied separately. (When ProteaBracket™ is used in conjunction with the S-5-PV Kit, an additional nut is required during installation to secure the universal PV stud and mounting disk to ProteaBracket's slotted L-flange.) The S-5-PV Kit is compatible with most common metal roofing materials, including brass. The S-5!® **EdgeGrab™** and S-5-PV Kit together accommodate PV frame thicknesses 30–48 mm (if EdgeGrab's serrated L-flange is positioned below the stud's hex nut) and 34–51 mm (if EdgeGrab's serrated L-flange is positioned above the stud's hex nut).[1]

The embossed panel guide makes the module placement easier. The mounting disk is multi-directional and rails are not required.

Four strategically placed under-disk hooks assist in wire management. The PV grab ears that hold the solar panel in place are broader to allow for ease of installation and precise module engagement.

Accommodating module thicknesses between 30 and 51 mm, the S-5-PV Kit fits the majority of solar panels on the market. Using the S-5! mini clamps, it fits most standing seam metal roofs. When paired with other S-5! products, the S-5-PV Kit and EdgeGrab will work on most exposed-fastened and corrugated metal roofs. The standard grab is designed to fit field conditions (two adjacent panels), while the new EdgeGrab is designed specifically for end conditions.

Wind dynamics are complex; thus, each system should be reviewed by a qualified licensed professional who understands wind effects on metal roof design and construction prior to purchase and installation. For more detailed information including specifications, installation instructions, and CAD drawings, visit **www.S-5.com** or your S-5-PV Kit distributor.

The S-5-PV Kit continues to be the easiest, most cost-effective way to install solar panels directly to standing seam metal roofs, remaining the most popular choice worldwide.

LISTED

Listed to UL subject 2703.
ETL Listed to UL 1703.*

S-5-PV Kit

(UL and ETL Listed)

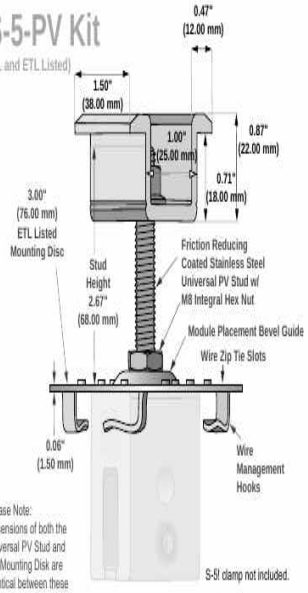

Please Note: Dimensions of both the Universal PV Stud and the Mounting Disk are identical between these two illustrations.

S-5! clamp not included.

EdgeGrab™

(Not UL or ETL Listed)

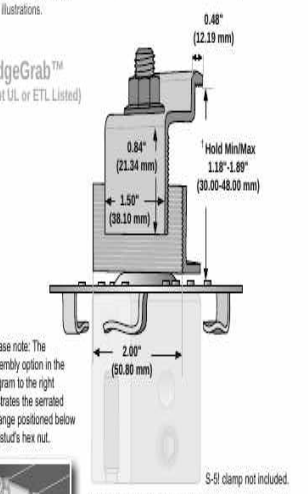

Please note: The assembly option in the diagram to the right illustrates the serrated L-flange positioned below the stud's hex nut.

S-5! clamp not included.

Please note: All measurements are rounded to the second decimal place.

** Patents pending. Certain components featured in illustration may not be UL listed.*
Due to the variety of attachment needs, S-5-PV Kits are sold separately from S-5! mini clamps. The S-5-PV Kit fits only S-5! mini clamps, NOT standard clamps.

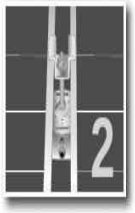

S-5!® Warning! Please use this product responsibly!

Products are protected by multiple U.S. and foreign patents. Visit the website at www.S-5.com for complete information on patents and trademarks. For maximum holding strength, setscrews should be tensioned and re-tensioned as the seam material compresses. Clamp setscrew tension should be verified using a calibrated torque wrench between 160 and 180 inch pounds when used on 22ga steel, and between 130 and 150 inch pounds for all other metals and thinner gauges of steel. Consult the S-5! website at www.S-5.com for published data regarding holding strength.

Copyright 2015, Metal Roof Innovations, Ltd. S-5! products are patent protected.
S-5! aggressively protects its patents, trademarks, and copyrights. Version 05.2015.

Distributed by

S-5!®

The Right Way!

S-5-U Clamp

The S-5-U clamp is by far our most popular and most versatile clamp. It fits about 85% of the standing seam profiles manufactured in North America—including most structural and architectural profiles. It can be used on vertically oriented seams and, by rotating the clamp 90 degrees, it can also be used on most horizontal 2" seam profiles.

Its simple design, generous dimensioning, and multiple hole orientations are what make the S-5-U clamp so versatile for use with the S-5!® snow retention products, such as ColorGard®, as well as with other heavy-duty applications.

Installation is as simple as setting the specially patented round-point setscrews into the clamp, placing the clamp on the seam, and tightening them to the specified tension. Then, affix ancillary items using the bolt provided with the product. Go to www.S-5.com/tools for information and tools available for properly attaching and tensioning S-5! clamps.

S-5-U Mini Clamp

The S-5-U Mini is a bit shorter than the S-5-U and has one setscrew rather than two. The mini is the choice for attaching all kinds of rooftop accessories: signs, walkways, satellite dishes, antennas, rooftop lighting, lightning protection systems, solar arrays, exhaust stack bracing, conduit, condensate lines, mechanical equipment—just about anything!*

*S-5! mini clamps are not compatible with, and should not be used with S-5!'s noRa!™ Confidence™ or ColorGard® snow retention systems.

1

2

3

S-5-U and S-5-U Mini

The right way to attach almost anything to metal roofs!

888-825-3432 | www.S-5.com |

The S-5-U clamp is our most popular and versatile clamp, fitting about 85% of the standing seam profiles in North America.

S-5!®

The Right Way!

The strength of the **S-5-U** clamp is in its simple design. The patented setscrews will slightly dimple the metal seam material but not pierce it—leaving the roof manufacturer's warranty intact.

The **S-5-U and S-5-U Mini clamps** are each furnished with the hardware shown to the right. Each box also includes a bit tip for tightening setscrews using an electric screw gun. A structural aluminum attachment clamp, the S-5-U is compatible with most common metal roofing materials excluding copper. All included hardware is stainless steel. Please visit **www.S-5.com** for more information including CAD details, metallurgical compatibilities and specifications.

The S-5-U clamp has been tested for load-to-failure results on most major brands and profiles of standing seam roofing. The independent lab test data found at www.S-5.com can be used for load-critical designs and applications. S-5!® holding strength is unmatched in the industry.

Example Profiles

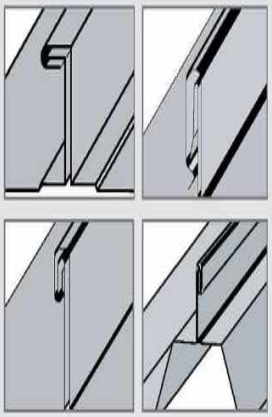

For horizontal seams under 0.65", do not use this clamp. Visit www.S-5.com for more detailed information and proper clamp usage.

S-5-U Clamp

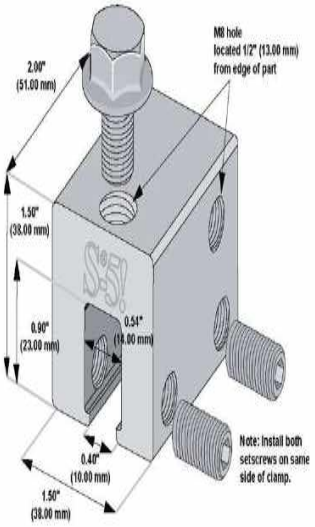

S-5-U Mini Clamp

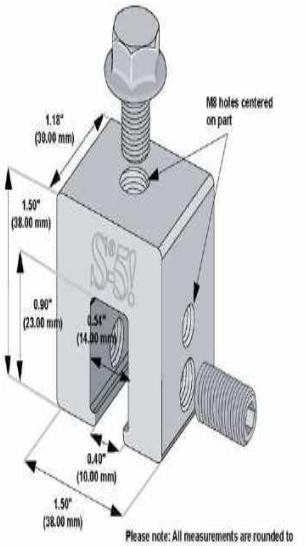

Please note: All measurements are rounded to the second decimal place.

S-5!® Warning! Please use this product responsibly!

Products are protected by multiple U.S. and foreign patents. Visit the website at www.S-5.com for complete information on patents and trademarks. For maximum holding strength, setscrews should be tensioned and re-tensioned as the seam material compresses. Clamp setscrew tension should be verified using a calibrated torque wrench between 140 and 180 inch pounds when used on 22ga steel, and between 130 and 150 inch pounds for all other metals and thinner gauges of steel. Consult the S-5! website at www.S-5.com for published data regarding holding strength.

Copyright 2015, Metal Roof Innovations, Ltd. S-5! products are patent protected.
S-5! aggressively protects its patents, trademarks, and copyrights. Version 052215.

Distributed by

SNAPNRACK UR-40 RACKING SYSTEM SHOWN MOUNTED ON ULTRA FOOT WITH UNIVERSAL END CLAMPS. FOR TILE ROOFING USE SNAPNRACK TILE REPLACEMENT, UNIVERSAL TILE HOOK, OR FLAT TILE HOOK SYSTEMS.

STANDARD LAG SCREW SPEC ASSUMES 5/16"Ø

LAG SCREW WITH 2½" MIN. EMBEDMENT INTO STRUCTURAL MEMBER.

TORQUE ALL FASTENERS TO 10-16 FT-LBS

RAILS CAN BE MOUNTED ON EITHER SIDE OF ULTRA FOOT: UPSLOPE OR DOWNSLOPE.

FOR UNEVEN ROOF SURFACES, UTILIZE THE SNAPNRACK LEVELER EXTENSION OR LEVELING SPACER. SEE DRAWINGS "UR40-D01", "UR40-D08", "UR40-D09", & "UR40-D10", FOR DETAILS AND LIMITATIONS.

REVISION:

A	11/30/2017	NEW DETAIL	MA

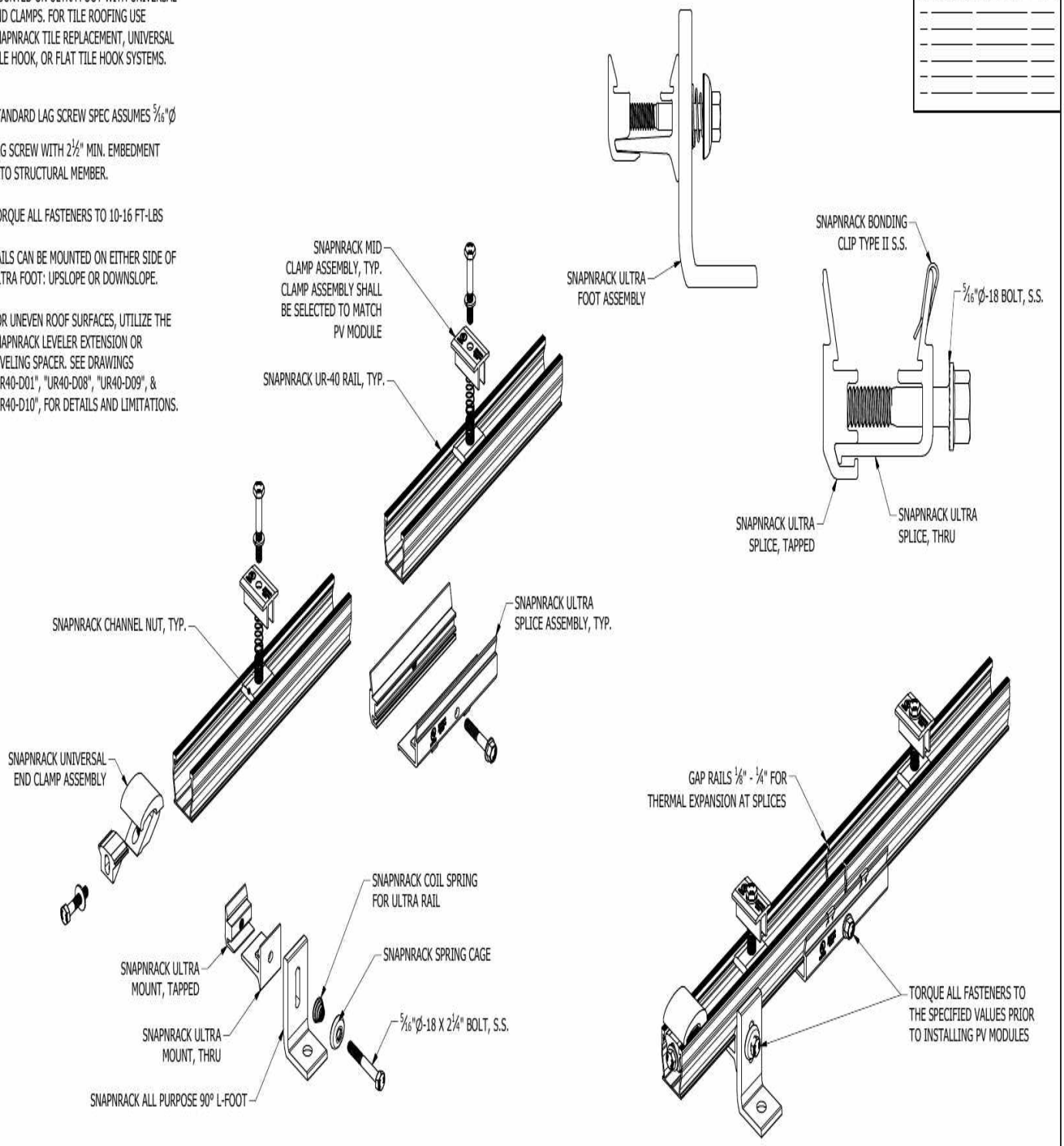

SnapNrack Solar Mounting Solutions	Sunrun South LLC 595 MARKET STREET, 29TH FLOOR • SAN FRANCISCO, CA 94105 USA PHONE (415) 580-6900 • FAX (415) 580-6902 THE INFORMATION IN THIS DRAWING IS CONFIDENTIAL AND PROPRIETARY. ANY REPRODUCTION, DISCLOSURE, OR USE THEREOF IS PROHIBITED WITHOUT THE WRITTEN CONSENT OF SUNRUN SOUTH LLC.	DESIGNER: M.Affentrager DRAFTER: M.Affentrager APPROVED BY: G.McPheeters	SCALE: DNS DATE: 11/30/2017	PART NUMBER: UR40-D04	DESCRIPTION: UR-40 ASSEMBLY DETAILS UEC	REV A

SNAPNRACK UR-40 RAIL AND SPLICE DETAILS

REFER TO SNAPNRACK INSTALLATION MANUAL FOR
5/16"Ø HARDWARE TORQUE SPECIFICATIONS

SPLICE POSITIONING:

- APPROVED - ANYWHERE ALONG RAIL SPAN BETWEEN **TWO** ROOF ATTACHMENTS
- NOT APPROVED - RAIL OVERHANGS / CANTILEVERS

USE OF THE UR-40 SPLICE WITH THE UR-60 RAIL IS **PROHIBITED**

BIN: N/A

REVISION:

1	5/7/2019	NEW DETAIL	MJA

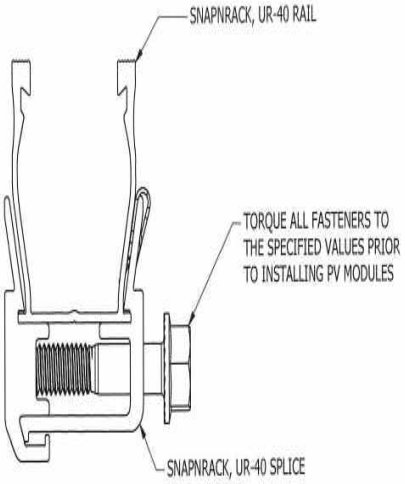

SNAPNRACK, UR-40 SPLICE INSALLED

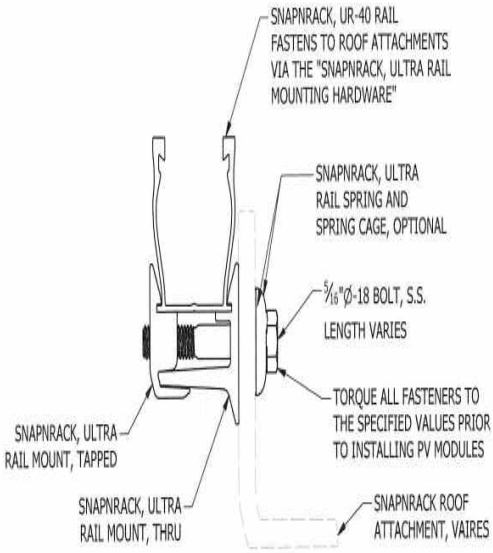

SNAPNRACK, ULTRA RAIL MOUNTING HARDWARE

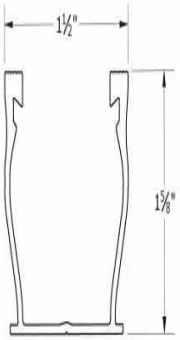

SNAPNRACK, UR-40 RAIL

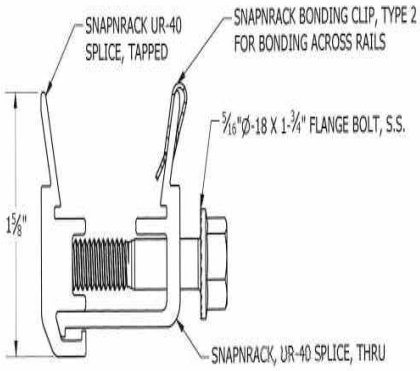

SNAPNRACK, UR-40 SPLICE

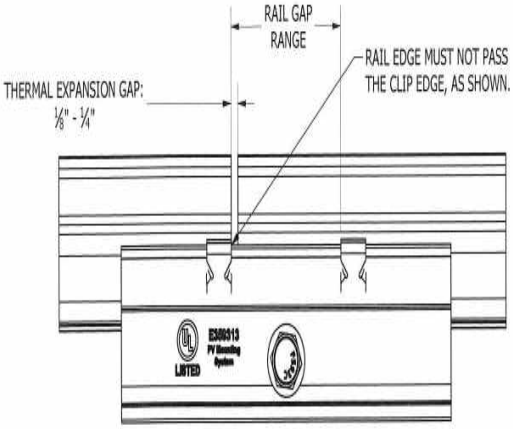

SPLICE ALIGNMENT LIMITS

SnapNrack Solar Mounting Solutions	Sunrun South LLC 595 MARKET STREET, 29TH FLOOR • SAN FRANCISCO, CA 94105 USA PHONE (415) 580-6900 • FAX (415) 580-6902 THE INFORMATION IN THIS DRAWING IS CONFIDENTIAL AND PROPRIETARY. ANY REPRODUCTION, DISCLOSURE, OR USE THEREOF IS PROHIBITED WITHOUT THE WRITTEN CONSENT OF SUNRUN SOUTH LLC.	DESIGNER: M.AFFENTRANGER DRAFTER: M.AFFENTRANGER APPROVED BY: B.PETERSON	SCALE: DNS DATE: 5/7/2019	DRAWING NUMBER: SNR-DC-00330	DESCRIPTION: ULTRA RAIL, COMPONENT DETAIL, UR-40 RAIL AND SPLICE	REV: 1

snapnrack.com

Certification Details

SnapNrack Ultra Rail system has been evaluated by Underwriters Laboratories (UL) and Listed to UL/ANSI Standard 2703 for Grounding/Bonding, Mechanical Loading, and Fire Classification.

Grounding/Bonding

The Ultra Rail system has been designed in compliance with UL Standard 2703 Section 9.1 Exception, which permits accessible components that **are not part** of the fault current ground path to **not be electrically bonded** to the mounting system (e.g. roof attachments, array skirt, etc.). For more details on the integrated grounding functionality see the Grounding Specifications section.

This racking system may be used to ground and/or mount a PV module complying with UL 1703 only when the specific module has been evaluated for grounding and/or mounting in compliance with the included instructions. See the Grounding Specifications for the list of modules tested with the Ultra Rail system for integrated grounding.

Ground Lugs have been evaluated to both UL 467 and UL 2703 Listing requirements.

Ultra Rail has been listed with the following Enphase microinverter models for grounding/bonding: M215, M250, and C250. The Enphase microinverters are certified to be mounted to SnapNrack rail with the MLPE Attachment or to the module frame with the Enphase Frame Mount. When installing the Enphase microinverters per the specifications in the MLPE Installation section of this manual, the total roof-mounted PV system is bonded (modules, racking and microinverters) and grounded through the Enphase ground circuit when the Enphase units are properly grounded through to the service entrance. Therefore, no ground lugs or equipment grounding conductor (EGC) are required on the SnapNrack systems.

Ultra Rail has been Listed with the following SolarEdge optimizer models for grounding/bonding: P300-5NC4ARS, P320-5NC4ARS, P370-5NC4AFS, and P400-5NC4AFS. The SolarEdge optimizers are certified to be mounted to SnapNrack rail with the MLPE Attachment or to the module frame with the SolarEdge Power Optimizer Frame-Mounted Module Add-On. When installing the SolarEdge optimizers per the specifications in the MLPE Installation section of this manual, the total roof-mounted PV system is bonded to the optimizer backing plate (modules, racking and optimizers) and grounded through the ground lugs installed on the SnapNrack rail. Therefore, it is not necessary to run an EGC to each SolarEdge optimizer.

Note: Frame-Mounted Module Add-On has been evaluated for all modules except Suniva modules.

Ultra Rail has been Listed with the following Ginlong Rapid Shutdown Units for grounding/bonding: Solis-RSD-1G 1:1 and Solis-RSD-1G 2:2. The Ginlong Rapid Shutdown Units are certified to be mounted to SnapNrack rail with the MLPE Attachment.

The mounting system Bonding Listing is only valid when installed with a Non-Separately Derived PV system. The PV system is required to have a direct electrical connection to another source, such as connecting to the grid via a grid interactive inverter.

SnapNrack recommends that bare copper never come into contact with aluminum.

Mechanical Loading

The Ultra Rail system is Listed for mechanical loading for different load ratings depending on the mounting configuration and PV module installed. For more details on the mechanical loading details see the Mechanical Loading Specifications section.

SnapNrack engineered systems should only be used with SnapNrack components and hardware. Any application outside of those specified in this Installation Manual and the Structural Engineering Report may void the warranty and structural certification could become invalid.

If the module clamps have been engaged and need to be loosened and reengaged, SnapNrack recommends moving the module frame 3mm to engage the bonding pin in a new location *if required by the AHJ.*

The UL Listing covers mechanical load ratings for the various span lengths, module orientations and positive, negative, and side load ratings. These values can be found in the Mechanical Loading Specifications section.

SnapNrack recommends a periodic re-inspection of the completed installation for loose components, loose fasteners, and any corrosion, such that if found, the affected components are to be immediately replaced.

SnapNrack
Solar Mounting Solutions

snapnrack.com

SnapNrack UL 2703 Fire Classification

March 2019

As of January 1st, 2015 many jurisdictions are now enforcing codes based upon updates to the International Building Code (IBC) and UL Standards 1703 (modules) and 2703 (mounting systems). The language included in the 2012 IBC requires that the combination of roof mounted solar modules and racking components is to be considered a system (IBC Section 1509.7.2). Additionally, it requires that this system shall meet or exceed the fire classification of the roof assembly.

The objective is to ensure that the PV system does not adversely affect the fire rating of the roof. Roof surface fire ratings are classified either A, B, or C; Class A being the most resistant to the spread of flame.

Since the physical characteristics of the PV module (material, thickness of glass, etc) also potentially affect how a fire will act, modules are now tested and assigned a "type" based upon these characteristics and spread of flame test results. There are 15 total module types, Types 1, 2 and 3 represent differences in the module composition and Types 4 - 15 are the same module compositions as Types 1 - 3 with differing fire test performance.

SnapNrack Series 100, Ultra Rail and RL systems have been Certified for a Class A fire rating with Type 1 and Type 2 modules, in accordance with the standards set forth in UL1703/2703 and IBC 2012. In order to maintain this classification, the SnapNrack mounting systems must be installed per the UL-approved Installation Manuals. Because the test was conducted with the modules at 5 inches from the roof surface (worst case scenario), there is no restriction to the standoff height.

Attachment 1 is the SnapNrack QIMS File which is accessed through the UL Online Certification Directory, or available here: SnapNrack QIMS File.

DESCRIPTION:	DRAWN BY:	SnapNrack Solar Mounting Solutions
SNAPNRACK, GROUND LUG	D.Ryan	
PART NUMBER(S):	REVISION:	595 MARKET STREET, 29TH FLOOR • SAN FRANCISCO, CA 94105 USA PHONE (415) 580-6900 • FAX (415) 580-6902
242-02101	A	THE INFORMATION IN THIS DRAWING IS CONFIDENTIAL AND PROPRIETARY. ANY REPRODUCTION, DISCLOSURE, OR USE THEREOF IS PROHIBITED WITHOUT THE WRITTEN CONSENT OF SUNRUN SOUTH LLC.

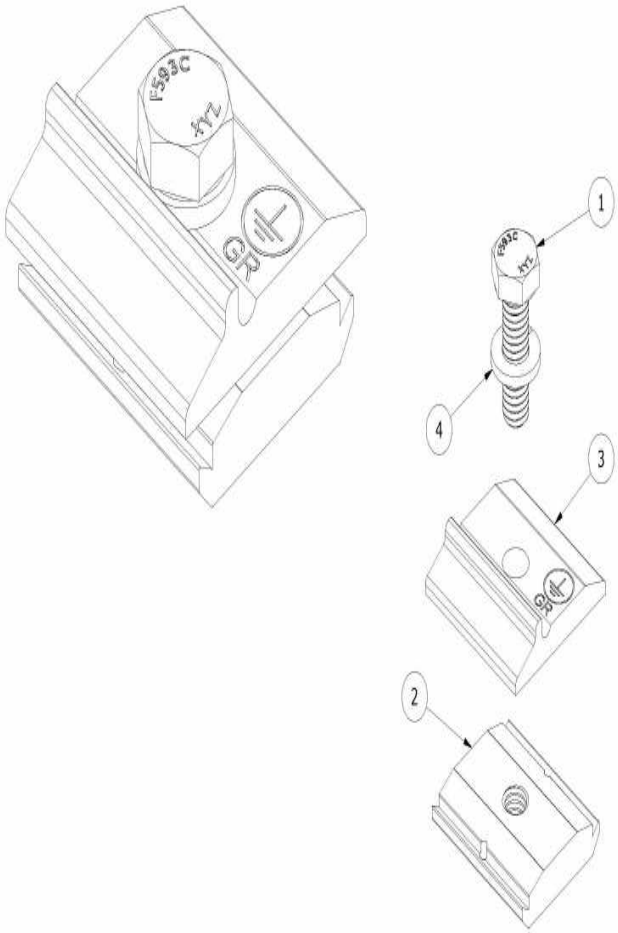

PARTS LIST		
ITEM	QTY	DESCRIPTION
1	1	BOLT, HEX CAP, 5/16IN-18 X 1IN, SS
2	1	SNAPNRACK, BONDING CHANNEL NUT
3	1	SNAPNRACK, GROUND LUG R PRC
4	1	5/16IN SS SPLIT LOCK WASHER

MATERIALS:	TIN-PLATED ALUMINUM, STAINLESS STEEL	OPTIONS:
DESIGN LOAD (LBS):	N/A	
ULTIMATE LOAD (LBS):	N/A	
TORQUE SPECIFICATION:	16 LB-FT	
CERTIFICATION:	UL 467 & UL 2703, FILE E359313	
WEIGHT (LBS):	0.13	

DESCRIPTION:	DRAWN BY:	SnapNrack Solar Mounting Solutions
SNAPNRACK, GROUND LUG	D.Ryan	
PART NUMBER(S):	REVISION:	595 MARKET STREET, 29TH FLOOR • SAN FRANCISCO, CA 94105 USA PHONE (415) 580-6900 • FAX (415) 580-6902
242-02101	A	THE INFORMATION IN THIS DRAWING IS CONFIDENTIAL AND PROPRIETARY. ANY REPRODUCTION, DISCLOSURE, OR USE THEREOF IS PROHIBITED WITHOUT THE WRITTEN CONSENT OF SUNRUN SOUTH LLC.

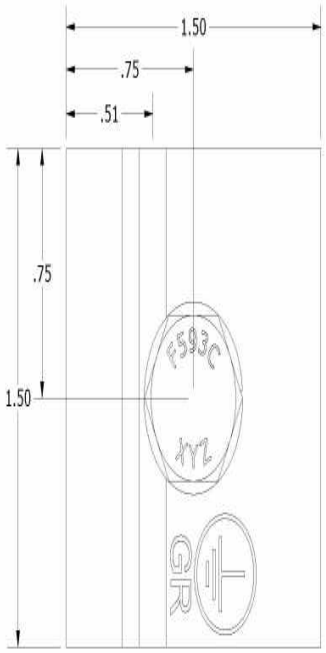

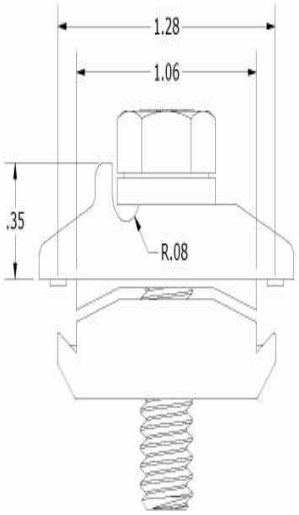

ALL DIMENSIONS IN INCHES

Grounding Specifications

snapnrack.com

System Bonding Methods

1. SnapNrack Mid Clamp
2. SnapNrack Adjustable End Clamp
3. SnapNrack UR-40 Rail Splice
4. SnapNrack UR-60 Rail Splice

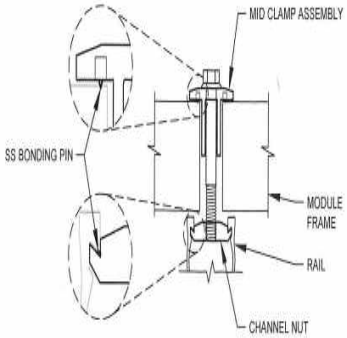

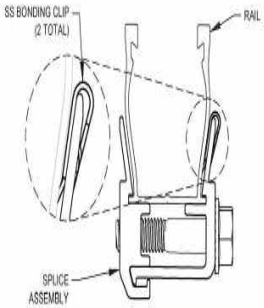

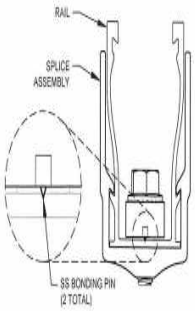

Note:
SnapNrack module clamps contain a SnapNrack Channel Nut with integral bonding clips or pins in assembly to properly bond the system (except Universal End Clamps).

Note:
SnapNrack Ultra Rail Splices contain integral bonding clips in assembly to properly bond the system.

SnapNrack Ground Lug Assembly

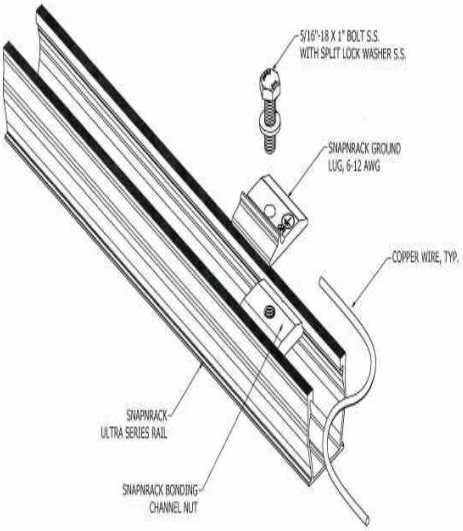

Grounding Specifications

snapnrack.com

Ground Path Details - SolarEdge

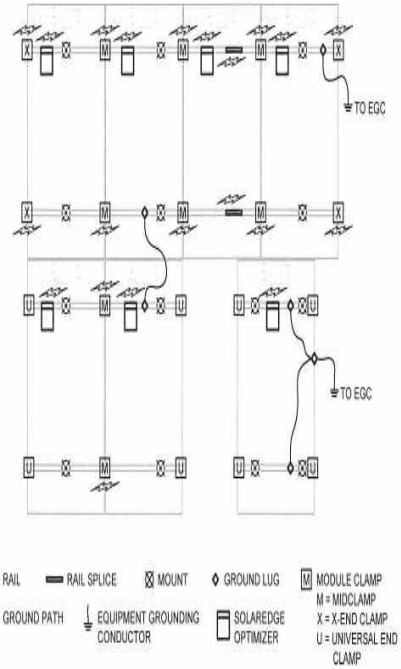

Ground Path Details - Enphase

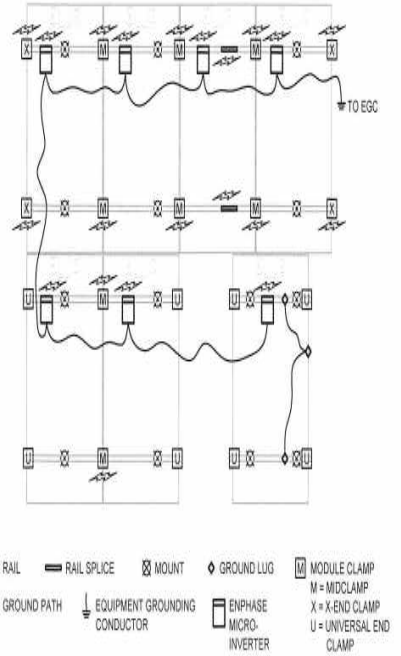

DESCRIPTION:	DRAWN BY:	SnapNrack™ Solar Mounting Solutions
SNAPNRACK, BONDING MID CLAMP	D.Ryan	
PART NUMBER(S):	REVISION:	
242-02050, 242-02051, 242-02052, 242-02053, 242-02054, 242-02055, 242-02056, 242-02057	A	595 MARKET STREET, 29TH FLOOR • SAN FRANCISCO, CA 94105 USA PHONE (415) 580-6920 • FAX (415) 580-6902

THE INFORMATION IN THIS DRAWING IS CONFIDENTIAL AND PROPRIETARY. ANY REPRODUCTION, DISCLOSURE, OR USE THEREOF IS PROHIBITED WITHOUT THE WRITTEN CONSENT OF SUNRUN SOUTH LLC.

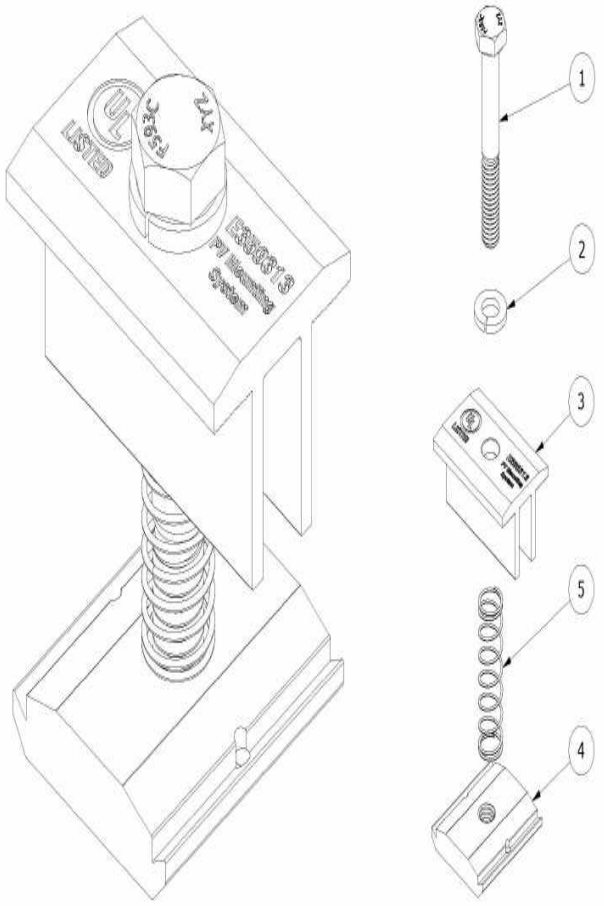

PARTS LIST		
ITEM	QTY	DESCRIPTION
1	1	5/16IN-18 SS HCS BOLT, LENGTH VARIES, CLEAR / BLACK
2	1	5/16IN SS SPLIT LOCK WASHER, CLEAR / BLACK
3	1	SNAPNRACK, BONDING MID CLAMP, CLEAR / BLACK
4	1	SNAPNRACK, BONDING CHANNEL NUT
5	1	SNAPNRACK, MID CLAMP SPRING, SS

MATERIALS:	6000 SERIES ALUMINUM, STAINLESS STEEL	OPTIONS:
DESIGN LOAD (LBS):	800	CLEAR / BLACK ANODIZED
ULTIMATE LOAD (LBS):	2400	
TORQUE SPECIFICATION:	10+ LB-FT	
CERTIFICATION:	UL 2703, FILE E359313	
WEIGHT (LBS):	0.16 - 0.18	

DESCRIPTION:	DRAWN BY:	SnapNrack™ Solar Mounting Solutions
SNAPNRACK, BONDING MID CLAMP	D.Ryan	
PART NUMBER(S):	REVISION:	
242-02050, 242-02051, 242-02052, 242-02053, 242-02054, 242-02055, 242-02056, 242-02057	A	595 MARKET STREET, 29TH FLOOR • SAN FRANCISCO, CA 94105 USA PHONE (415) 580-6920 • FAX (415) 580-6902

THE INFORMATION IN THIS DRAWING IS CONFIDENTIAL AND PROPRIETARY. ANY REPRODUCTION, DISCLOSURE, OR USE THEREOF IS PROHIBITED WITHOUT THE WRITTEN CONSENT OF SUNRUN SOUTH LLC.

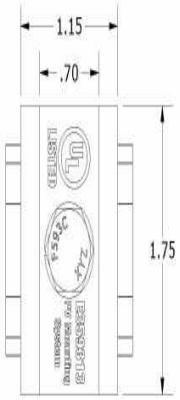

MID CLAMP PROPERTIES		
SKU	BOLT LENGTH (X)	FINISH
242-02050	2.25"	CLEAR
242-02051	2.50"	CLEAR
242-02052	2.75"	CLEAR
242-02053	2.25"	BLACK
242-02054	2.50"	BLACK
242-02055	2.75"	BLACK
242-02056	3.00"	CLEAR
242-02057	3.00"	BLACK

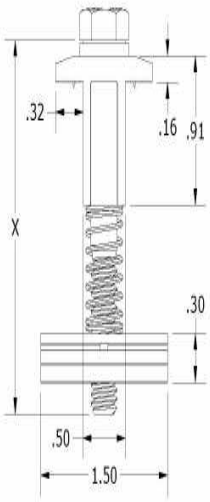

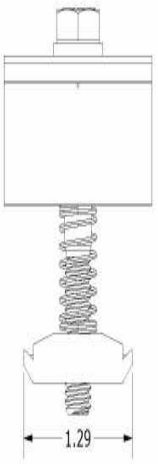

ALL DIMENSIONS IN INCHES

UL Product iQ™

QIMS.E359313 - MOUNTING SYSTEMS, MOUNTING DEVICES, CLAMPING DEVICES AND GROUND LUGS FOR USE WITH PHOTOVOLTAIC MODULES AND PANELS

Mounting Systems, Mounting Devices, Clamping Devices and Ground Lugs for Use with Photovoltaic Modules and Panels

See General Information for Mounting Systems, Mounting Devices, Clamping Devices and Ground Lugs for Use with Photovoltaic Modules and Panels

SNAPNRACK
775 Fiero Ln
Suite 200
San Luis Obispo, CA 93401 USA

E359313

Cat. No.	Investigated for Bonding	Investigated for Mechanical Loading	System Fire Classification (A, B or C)	Tested in Combination With
Photovoltaic mounting system				
Series 100 -- Consisting of the Following Components: Flashed L-Foot, Standard Standoff, Four Hole Standoff, Heavy Duty Standoff, Hanger Bolt Clamp, Corrugated Block, 10°-45° Tilt Mount, Dimensioned Seam Clamp, Dimensioned Wide Seam Clamp, Rail Splice, S Tile Roof Hook, Flat Tile Roof Hook, Metal Roof Base Standoff, Standard Rail, Mid Clamp, X End Clamp, Universal End Clamp, Flat Tile Replacement Kit, S Tile Replacement Kit, W Tile Replacement Kit.	Y*	See Below	See Below	UL Listed PV Modules: Hyundai Heavy Industries Co Ltd (E325005) - HiS-MXXXRG where XXX is 235 to 275; HiS-SXXXRG where XXX is 245 to 295; HiS-SXXXRW where XXX is 250 to 265; HiS-MXXXMG where XXX is 210 to 270; HiS-SXXXMG where XXX is 220 to 275. All may be followed by the suffix BK or blank. Jinko Solar (E362479) - JKMXXXP-60, JKMXXXPP-60, JKMXXXP-60-V, JKMXXXP-60-J4, JKMXXXP-60B-J4 where XXX is 200 to 290; JKMXXXP-72, JKMXXXPP-72, JKMXXXP-72-V, JKMXXXPP-72-V where XXX is 250 to 360; JKMXXXM-60 where XXX is 200 to 305; JKMXXXM-72 where XXX is 250 to 365; JKMXXXPP-60-V where XXX is 200 to 300; JKMSXXXP-72 where XXX is 250 to 330; JKMXXXM-60L where XXX is 305-325; JKMXXXM-60HBL (310-330); JKMXXXM-72L-V(370-390); JKMXXXM-72HL-V (380-400). Kyocera (E467150) - KU-60 1000 V Series - KUXXX, where XXX is 250 to 275, followed -6BCA, -6BFA, -6BPA, -6DCA, -6DFA, -6DPA, -6MCA, -6MPA, -6XCA, -6XPA, -6ZCA, -6ZPA, -6ZPB, -6ZCB, -6ZPC, -6ZCC, -6ZPD, -6ZCD, -6ZPE, 6ZCE, -6MPC, -6MCC, -6MPB or -6MCB; KU-80 1000 V Series - KUXXX, where XXX is 315 to 335, followed by -8BCA, -8BFA or -8BPA. LG (E329725) - LGXXXQ1C-A5 where XXX is 340 to 385; LGXXXQ1K-A5 where XXX is 315 to 375. LGXXXN1C-V5 where XXX is 320 to 350; LGXXXN1K-V5 where XXX is 320 to 340; LGXXXQ1C-V5 where XXX is 340 to
Series 200 - Consisting of the Following Components: Kee Klamp Tee, Speed Rail Tee, Speed Rail Single Swivel, Threaded Pipe Coupler, Pipe Clamp Assembly, Ground Rail, Mid Clamp, X End Clamp, Universal End Clamp				

UR-40 Mounting and Bonding Systems for use with Photovoltaic Modules, consisting of the following components: UR-40, Mid Clamp, X End Clamp, Universal End Clamp, UR-40 Splice, UR-40 Composition Mount Kits, Standard Standoff for UR-40, Four Hole Standoff for UR-40, Heavy Duty Standoff for UR-40, Metal Roof Base Standoff for UR-40, UR-40 Corrugated Block , , Standard Base Seam Clamp for UR-40, Wide Base Seam Clamp for UR-40, UR-40 Universal Tile Hook, UR-40 Flat Tile Hook, UR-40 Tile Hook F, UR-40 Tile Hook WS, Flat Tile Replacement Kit for UR-40, S Tile Replacement Kit for UR-40, W Tile Replacement Kit for UR-40, UR-40 Hanger Bolt Clamp, SnapNrack Ground Lug Models 242-02101 or 242-92202, Ilsco Ground Lug Models GBL-4DBT or SGB-4, UR-40 Skirt Assembly, MLPE Frame Attachment Kit, MLPE Rail Attachment Kit, Smart Clips, Tilt Kits.				
UR-60 Mounting and Bonding Systems for use with Photovoltaic Modules, consisting of the following components: UR-60 Rail, Mid Clamp, X End Clamp, Universal End Clamp, UR-60plice, UR-40 Composition Mount Kits, Standard Standoff for UR-40, Four Hole Standoff for UR-40, Heavy Duty Standoff for UR-40, Metal Roof Base Standoff for UR-40, UR-40 Corrugated Block , , Standard Base Seam Clamp for UR-40, Wide Base Seam Clamp for UR-40, UR-40 Universal Tile Hook, UR-40 Flat Tile Hook, UR-40 Tile Hook F, UR-40 Tile Hook WS, Flat Tile Replacement Kit for UR-40, S Tile Replacement Kit for UR-40, W Tile Replacement Kit for UR-40, UR-40 Hanger Bolt Clamp, SnapNrack Ground Lug Models 242-02101 or 242-92202, Ilsco Ground Lug Models GBL-4DBT or SGB-4, UR-40 Skirt Assembly, MLPE Frame Attachment Kit, MLPE Rail Attachment Kit, Smart Clips, Tilt Kits				

					375; LGXXXQ1K where XXX is 350 to 365. Panasonic (E181540) - VBHNXXXSA16 where XXX is 320 to 335; VBHNXXXKA01 and VBHNXXXKA02 where XXX is 310 to 325, VBHNXXXKA03 and VBHNXXXKA04 where XXX is 310 to 325; VBHNXXXSA17 and VBHNXXXSA18 where XXX is 325 to 335. VBHNXXXSA17E where XXX is 325 to 330. REC Solar AS (E308147) - RECXXX, where XXX is 214 to 270, all may be followed by PE, PE(BLK), PE-US, PE-US(BLK), PEQ2 or PEQ3. Renesola Jiangsu Ltd (E312637) - JCXXXM-24/Bb Series where XXX is 200 to 270; JCXXXM-24/BBh Series where XXX is 235 to 270. Suniva Inc (E333709) - MVX-XXX-60-5-YYY where XXX is 235 to 265 and YYY is 701 or 7B1; OPT-XXX-60-4-YYY where XXX is 250 to 275 and YYY is 800 or 8B0. Sunpower (E246423)- Gen 3 or Gen 5 frame models SPR-XYY-### where YY represents numbers 18, 19, 20, 21 or 22 and ### represents any number from 365 to 310 and 274										

											XXX where XXX is 225 to 275; BVM6610M-XXX where XXX is 235 to 280; BVM6612P-XXX where XXX is 270 to 330; BVM6612M-XXX where XXX is 280 to 340. Canadian Solar - CS6P-XXX-P, CS6P-XXX-M where XXX is 200 to 300; CS6P-XXX-P-SD, CS6K-XXX-P-SD where XXX is 240 to 300; CS6K-XXX-M, CS6K-XXX-MS, CS6K-XXX-M-SD where XXX is 240 to 305; CS6K-XXX-P where XXX is 220 to 300; CS6X-XXX-P where XXX is 250 to 360; CS6V-XXX-M where XXX is 215 to 225; CS6V-XXX-P where XXX is 250 to 255; CS3K-XXX-P where XXX is 250 to 310; CS3K-XXX-MS where XXX is 280 to 330; CS1K-XXX-MS where XXX is 285 to 345; CS1H-XXX-MS, CS1H-XXX-MS-AB where XXX is 310 to 350. ET Solar - ET-P660XXXBB where XXX is 200 to 265; ET-P660XXXWB where XXX is 200 to 265; ET-P660XXXWW where XXX is 200 to 265; ET-P660XXXWWG where XXX is 235 to 265; P660XXXWB/WW where XXX is 200 to 265 and may be followed by WB or WW; P660XXXWWG where XXX is 240 to					

					250; M660XXXBB where XXX is 250 to 265; M660XXXWW where XXX is 200 to 270. Hanwha Q Cells - B.LINE PLUS BFR-G4.1-XXX, B.LINE PRO BFR-G4.1-XXX, Q.BASE GY-XXX, Q.PEAK G4-XXX, Q.PLUS BFR-G3.1-XXX, Q.PLUS BFR-G4-XXX, Q.PLUS BFR-G4.1-XXX, Q.PLUS BFR-G4.1/TAA-XXX, Q.PLUS BRF-GY-XXX, Q.PLUS GY-XXX, Q.PLUS G4-XXX, Q.PRO BFR-G4-XXX, Q.PRO BFR-G4.1-XXX, Q.PRO BFR-G4.3-XXX, Q.PRO BFR-GY-XXX, Q.PRO BLK-GY-XX, Q.PRO G4-XXX, Q.PRO GY-XXX, Q.PRO GY/SC-XXX, where XXX is 245 to 295; Q.PEAK BLK-G3.1-XXX, Q.PEAK BLK-G4.1-XXX, Q.PEAK BLK-G4.1/TAA-XXX, Q.PEAK G3.1-XXX, Q.PEAK G4.1-XXX, Q.PEAK G4.1/MAX-XXX, Q.PEAK G4.1/TAA-XXX where XXX is 270 to 325; Q.PEAK DUO BLK-G5-XXX, Q.PEAK DUO G5-XXX where XXX is 290 to 325. Hanwha SolarOne - HSL60P6-PB-X-YYYQ where X is 2 or 4, and YYY is 230 to 270, may be followed by additional suffixes. JA Solar - JAP6-60-XXX/3BB where XXX is 235 to 265; JAM6-60-XXX/SI

				XXX is 215 to 285; TP660M-XXX where XXX is 210 to 300.
Series 100 with and without the Skirt Assembly	See Above	See Above	A	Type 1 and Type 2 PV Modules
UR-40 with and without UR-40 Skirt Assembly				
RL Mounting System with and without Skirt-First A-Mount or Frame-Mounted Skirt				
RL Generation 1 with or without Skirt				
UR-60 with and without UR-40 Skirt Assembly				
Series 100 - Consisting of the Following Components: Flashed L-Foot, Standard Standoff, Four Hole Standoff, Heavy Duty Standoff, Hanger Bolt Clamp, Corrugated Block, Dimensioned Seam Clamp, Dimensioned Wide Seam Clamp, Rail Splice, S Tile Roof Hook, Flat Tile Roof Hook, Mid Clamp, X End Clamp, Universal End Clamp, Standard Rail	N	Y	See Above	UL Listed PV Modules: Trina Solar: TSM-XXXPD05, TSM-XXXPD05.05 and TSM-XXXPD05.08, where XXX 240 to 280. Hyundai Heavy Industries Co Ltd: HiS-XXXRG Series where XXX is 235 to 275, HiS-SXXXRG, where XXX is 245 to 295, HiS-SXXXRW where XXX is 250 to 265. Jinko Solar: Models JKMXXXP-60 where XXX is 200 to 265; JKMXXXM-60 where XXX is 200 to 265; JKMXXXPP-60 where XXX is 200 to 265; JKMXXXP-60-J4 where XXX is 200 to 265; JKMXXXP-60B-J4 where XXX is 200 to 265. Panasonic (E181540) - VBHNXXXSA16 where XXX is 320 to 335; VBHNXXXKA01 and VBHNXXXKA02 where XXX is 310 to 325. ReneSola: Models JCXXXM-24/Bbh where XXX is 235 to 270.
Series 200 - Consisting of the Following Components: Kee Klamp Tee, Speed Rail Tee, Speed Rail Single Swivel, Threaded Pipe Coupler, Pipe Clamp Assembly, Ground Rail, Mid Clamp, X End Clamp, Universal End Clamp.				

		Bonding	Mounting		Min Profile (w x l)	Min Thk	Max Thk	Mtl	Surface Prep	Size	Tightening Torque (lbs-in.)	Min	Max	Wire Type (Mtl)	W Ty
242-02101	20	Y	Y	N	1.5 in. x 1.5 in.	Mounted on Snapnrack Ground or Standard Rails		AL	Anodized	5/16-18	16	N/A	N/A	CU	So
242-92202	20	Y	Y	N	0.5 in. x 0.5 in	Mounted on RL Leverlock Slider Assembly Rails		AL	Anodized	5/16-18	8 ft-lb	N/A	N/A	CU	So

Photovoltaic Bonding Device: MLPE Frame Attachment Kit

Cat. No.	Max OCPD (A)	Frame Thickness Anodized AL (mm)	MLPE Thickness AL(mm)	MLPE Thickness SS 304 (mm)	MLPE Slot Width (mm)	Torque Value	Tested in Combination With:
242-02151	20	0.8 - 2.4	2.0 - 2.5	2.0	8.1 - 8.5	10 ft.lb.	PV Modules Described in Mounting System Series 100 with frame thickness limitations.

The following components have been tested for roof penetration utilizing the Wind-Driven Rain Test from UL Subject 2582:

Cat. No.	Tested with the Following Securement Means	Tested with the Following Seal/Sealant & Specific Location	Tested with the Following Roof Deck Construction
Photovoltaic mounting system component			
Series 100 - Consisting of the following components: Composition flashing, Umbrella L-foot, Umbrella Bolt Assembly	Umbrella Bolt Assembly	No sealant	Asphalt shingles
RL Mounting System - Consisting of the following components: Composition flashing, Flash Track PRC, Flash Track End Caps, Umbrella Bolt	Umbrella Bolt Assembly	No sealant	Asphalt shingles
UR-40 Mounting System - Consisting of the following components: Composition flashing, Umbrella L-foot, Umbrella Bolt Assembly	Umbrella Bolt Assembly	No sealant	Asphalt shingles
UR-60 Mounting System - Consisting of the following components: Composition flashing, Umbrella L-foot, Umbrella Bolt Assembly	Umbrella Bolt Assembly	No sealant	Asphalt shingles

Company: SUNRUN SOUTH LLC, DBA SNAPNRAC

Type of Equipment: PV Module Mounting Systems (QIMS)

Model Designation: Ultra Rail Mounting Systems (UR-40 and UR-60)

UL File Number: E359313

To whom it may concern:

This letter is confirmation that the Ultra Rail mounting systems were investigated in accordance with the Standard for Rack Mounting Systems, Mounting Devices, Clamping/Retention Devices and Ground Lugs for Use with Flat-Plate Photovoltaic Modules and Panels, UL/ANSI 2703, 1st Edition, dated January 28, 2015.

These systems have been evaluated for bonding, mechanical loading and fire per the requirements of UL 2703.

The systems have been evaluated for the creation of an equipotential bond for the interconnected photovoltaic module frames, which can then be grounded in accordance to the U.S. National Electrical Code (U.S. NEC).

The systems employs top-down clamps which have been evaluated for frame-to-system bonding, at a mounting torque and with specific modules defined by SnapNrack. The systems have been assessed to a maximum Over-Current Device (OCD) Protection level of 20 Amps.

These systems have also been evaluated for a Class A System Fire Classification for Low-Sloped and Steep-Sloped Roofs with Type 1 and Type 2 modules. System fire rating was established both with and without the Skirt Assembly, making the skirt optional to maintain system fire ratings. Modules were tested at a height of 5 inches off the test deck which is considered a worst case condition according to UL 2703.

Certain components have also been evaluated for Wind-Driven Rain, per the requirements of UL Subject 2582.

For additional details about Ultra Rail systems UL Listing and to review a list of modules for which the systems have been tested, please see the following: https://iq.ulprospector.com/en/profile?e=122609

Gerrell Washington

Engineering Project Handler

PZSE structural ENGINEERS

January 7, 2020

SnapNrack
775 Fiero Lane, Ste. 200
San Luis Obispo, CA 93401
TEL: (877) 732-2860

Attn.: SnapNrack - Engineering Department

Re: SnapNrack pre-engineered PV racking systems:

- RL Universal System (Report # 2019-02916A.01 and B.01)
- S200 Ground Mount System (Report # 2017-00240-D.02)
- UR40 Railed System (Report # 2017-03227.11)
- UR60 Railed System (Report # 2018-11940.03)

Subject: Engineering certification for the State of California.

PZSE, Inc. - Structural Engineers has provided engineering and span tables as presented in the above referenced reports. All information, data, and analysis therein are based on, and comply with, the following building codes and typical specifications:

Building Codes:

1. ASCE/SEI 7-10 & 7-16, Minimum Design Loads for Buildings and Other Structures, by American Society of Civil Engineers
2. 2016 & 2019 California Building Code, by California Building Standards Commission
3. 2016 & 2019 California Residential Code, by California Building Standards Commission
4. AC428 Acceptance Criteria for Modular Framing Systems Used to Support Photovoltaic (PV) Panels, November 1, 2012, by ICC-ES
5. Aluminum Design manual 2015, by The Aluminum Association, Inc.
6. ANSI/AWC NDS-2018, National Design Specification for Wood Construction, by the American Wood Council

This letter certifies that the design criteria and design methodology for the SnapNrack product span tables are in compliance with the above codes. Please refer to the system specific Engineering Certification Reports (listed above) for system specific design criteria and limitations.

If you have any questions on the above, do not hesitate to call.

REGISTERED PROFESSIONAL ENGINEER KENNETH ZACHER No. S3878 Exp. 3-31-21 STRUCTURAL STATE OF CALIFORNIA

Prepared by:
PZSE, Inc. – Structural Engineers
Roseville, CA

1478 Stone Point Drive, Suite 190. Roseville, CA 95661
T 916.961.3960 F 916.961.3965 W www.pzse.com
Experience | Integrity | Empowerment

August 6, 2019

SnapNrack
775 Fiero Lane, Ste. 200
San Luis Obispo, CA 93401
TEL: (877) 732-2860

Attn.: SnapNrack - Engineering Department

Subject: Report # 2017-03227.11 – Engineering Certification and Span Tables for the SnapNrack Ultra Rail Solar Photovoltaic Racking System

PZSE, Inc. – Structural Engineers has reviewed and analyzed the SnapNrack Ultra Rail Racking System, a proprietary mounting system constructed from modular parts, which is intended for rooftop installation of solar photovoltaic (PV) panels; and has provided the attached span tables. This review included the complete system including the "UR-40" aluminum rail (6005-T56 alloy), attachment devices, splice elements, and PV Panels. All information, data, and analysis contained within are based on, and comply with, the following building codes and typical specifications:

Building Codes:
1. ASCE/SEI 7-16, Minimum Design Loads for Buildings and Other Structures, by American Society of Civil Engineers
2. 2018 International Building Code, by International Code Council, Inc.
3. 2018 International Residential Code, by International Code Council, Inc.
4. AC428, Acceptance Criteria for Modular Framing Systems Used to Support Photovoltaic (PV) Panels, November 1, 2012 by ICC-ES
5. Aluminum Design Manual 2015, by The Aluminum Association, Inc.
6. ANSI/AWC NDS-2015, National Design Specification for Wood Construction, by the American Wood Council

Design Criteria: Risk Category II; Seismic Design Category = A - E

Wind Loads: Basic Wind Speed (ultimate) per ASCE 7-16 = 95 mph to 190 mph. Includes roof pitches from 0° to 90°, up to 60 feet mean roof height, and exposure categories B, C, & D. Parapets, roof overhangs, and topographic wind speed adjustment have not been considered.

Snow Loads: Ground Snow Load = 0 to 120 (psf). Spans are based on the sloped roof snow load (Ps) corresponding to each ground snow load. See Appendix A to adjust span tables for non-reducible snow loads.

PV Modules: All solar PV modules with metal frames. "60-Cell" tables are applicable for modules up to 5'-6" (66") long; "72-Cell" tables are applicable for modules up to 6'-6" (78") long; and "Landscape" tables are applicable for modules up to 3' 4-1/2" (40-1/2") long in the narrow direction. Module length is defined to be perpendicular to the rail, regardless of panel orientation.

If you have any questions, do not hesitate to call.

Prepared by:
PZSE, Inc. – Structural Engineers
Roseville, CA

Ultra Rail Racking System with UR-40 Rail:

The SnapNrack Ultra Rail Racking System is intended for the rooftop installation of solar photovoltaic modules and is constructed from an assortment of modular parts as described in this report and shown in the attached details.

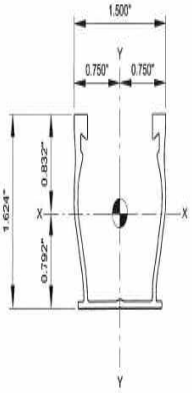

UR-40 Rail

Material:	6005-T5 Aluminum Extrusion
Area of Cross-Section, A	0.357 in^4
Moment of Inertia, I_{xx}:	0.125 in^4
Moment of Inertia, I_{yy}:	0.132 in^4
Centroid, $\bar{Y}$ (Bottom):	0.792 in
Centroid, $\bar{X}$ (Left):	0.750 in
Section Modulus, S_{xx}:	0.150 in^3
Section Modulus, $S_{yy(top)}$:	0.158 in^3
Section Modulus, $S_{yy(bot)}$:	0.175 in^3

Figure 1: Diagram of UR-40 Rail Profile Covered by This Report (with Section Properties)

Flush-Mount System Geometry Limitations:

Flush-Mounted PV modules are designed per the Components and Cladding provisions of ASCE 7. Flush-Mounted PV modules shall be oriented parallel to the plane of the roof surface, and shall be located between 2" to 10" clear from the surface of the roof to the PV module. The maximum cantilever length of the rail is L/3, where "L" is the maximum rail span after adjustments, provided there is at least 1 module length between maximum cantilevers. The modules shall be centered between the rails with consideration of industry standard tolerance. The ½" gap between each PV module has been considered in the span charts, and shall not be obstructed. Installations utilizing the Tile Replacement or Tile Hook attachment devices are permitted to have panels offset from the centerline of the rails.

Attachment to Roof:

The attached span tables include consideration of the attachment device capacity, based on UL 2703 load testing performed by SnapNrack. Tested load values are developed with 5/16" Ø lag screws with an effective embedment of 2-1/2" into a Douglas Fir substrate, with a reference withdrawal (uplift or pullout) load capacity of 532 lb, and a reference shear (side or lateral) load capacity of 270 lb for resisting short-term wind or seismic loads. Reference values are the base values, before any adjustment is made per the NDS. Installations into alternate substrates or which use alternate fasteners shall be permitted; provided that the fastener has tested or code-derived allowable load capacities, and meets one of the following two criteria: A) The allowable load values for the alternate fastener shall meet or exceed the allowable values noted above for the 5/16" Ø lag screws in Douglas Fir; or B) the span length identified in the "span tables" shall be reduced according to the more restrictive of the following two formulas:

$$Rail\ Span = Table\ Span * \frac{Alternate\ Reference\ Withdrawl\ Capacity}{532\ lb}$$

Or

$$Rail\ Span = Table\ Span * \frac{Alternate\ Reference\ Shear\ Capacity}{270\ lb}$$

These formulas shall not be used to increase the allowable span beyond the spans listed in the span tables.

Attachment Devices:

The Flush-mount span tables have been grouped into sets of attachment devices called "Bins", which are presented in the table below. To use this table, find the attachment device to be used in the list below, then read across to determine which bin the attachment is in. The spans may then be determined from the table with the corresponding Bin number. Structural details for the system and attachments may be found in Appendix D. Note: Side load direction is parallel to rafter.

Attachment Device Name	Detail Reference	Bin No.	Maximum Design Load			
			Uplift	Down	Side	Lateral
Ultra Rail Flush-Mount, Standard Base Seam Clamp with L-Foot †	SNR-DC-00342	1	**598.4**	**461.8**	**275.7**	**275.7**
Ultra Rail Flush-Mount, Wide Base Seam Clamp with L-Foot †	SNR-DC-00342					
Ultra Rail Flush-Mount, Flat Tile Hook	SNR-DC-00346	2	**318.3**	**394**	500	500
Ultra Rail Flush-Mount, Universal Tile Hook	SNR-DC-00347		344	423.1	**416.7**	**416.7**
Ultra Rail Flush-Mount, Hanger Bolt Clamp	SNR-DC-00354		397.3	460.9	500	500
Ultra Rail Flush-Mount, Flashed L-Foot (92 Deg)	SNR-DC-00340	3	**309.4**	**1468.7**	**251.4**	**251.4**
Ultra Rail Flush-Mount, Tile Replacement	SNR-DC-00341	4	**444.7**	**1333.3**	**119.4**	**119.4**
Ultra Rail Flush-Mount, All Purpose L-Foot (90 Deg)	SNR-DC-00340	5	444.7	1468.7	259.3	259.3
Ultra Rail Flush-Mount, Corrugated Straddle Block with L-Foot	SNR-DC-00343		444.7	1468.7	323.6	323.6
Ultra Rail Flush-Mount, Metal Roof Base with L-Foot	SNR-DC-00344 SNR-DC-00345		444.7	1468.7	446.6	446.6
Ultra Rail Flush-Mount, Metal Roof Base with 7 in Standoff	SNR-DC-00352 SNR-DC-00353		416.1	**788.2**	285.9	285.9
Ultra Rail Flush-Mount, 1-Hole Base with 5-1/2 in, 7 in, or 8-1/2 in Standoff	SNR-DC-00348 SNR-DC-00349		444.7	**788.2**	264.8	264.8
Ultra Rail Flush-Mount, 4-Hole Base with 5-1/2 in Standoff	SNR-DC-00350 SNR-DC-00357 SNR-DC-00358 SNR-DC-00359		444.7	**788.2**	222.3	222.3
Ultra Rail Flush-Mount, 6-Hole Base with 7 in HD Standoff	SNR-DC-00351		**405.2**	**788.2**	**213**	**213**
Ultra Rail Flush-Mount, 4-Hole Base with 8-1/2 in Standoff	SNR-DC-00350	6	**444.7**	**788.2**	**136.3**	**136.3**
Ultra Rail Flush-Mount, Tile Roof Hook F	SNR-DC-00356	7	848.7	**500 ***	554.1	554.1
Ultra Rail Flush-Mount, Tile Roof Hook WS	SNR-DC-00355		**820.3**	**500 ***	**429.9**	**429.9**
Ultra Rail Flush-Mount, Umbrella L-Foot	SNR-DC-00339	8	**802.2**	**1333.3**	**356.7**	**356.7**

Table 1: Allowable load capacities of SnapNrack Flush-Mount attachment devices when used with the UR-60 rail. The lowest load value in each Bin (bold value) is used for calculation of the corresponding span table.

† Seam clamp load values are the lower of the racking system capacity, clamp slip strength, and seam rupture; based on testing performed with the clamp installed on representative panels of both 24ga steel and .032" (20ga) aluminum. Installation on thicker/stronger panels is permitted. Fastening or attachment of standing seam roof panels to the roof structure has not been evaluated.

* In order to reduce the chance for breaking roof tiles, SnapNrack recommends limiting downforce reaction load of the tile hook devices in Bin 7 to a maximum of 333 lb.

Components and Cladding Roof Zones:

The Edge Zones of the roof shall be determined based on the building's dimensions using Figure 2 below. The Edge Zone, "a", is the smaller of 10% of the least horizontal dimension, or 40% of the building height, and "a" shall not be taken as less than 3 feet (ASCE 7-16 figures 30.3-1 & 30.3-2). For buildings exceeding a least horizontal dimension of 60 feet, further analysis may be required to determine proper Edge Zones. Edge and Corner Zone spacings (Zone 2 & 3, respectively) apply only to mounts located in those Zones, not to all the mounts supporting the module. For the 45-90 degree roof pitch range, mount spacings shall be determined utilizing roof zones 1, 2, & 3.

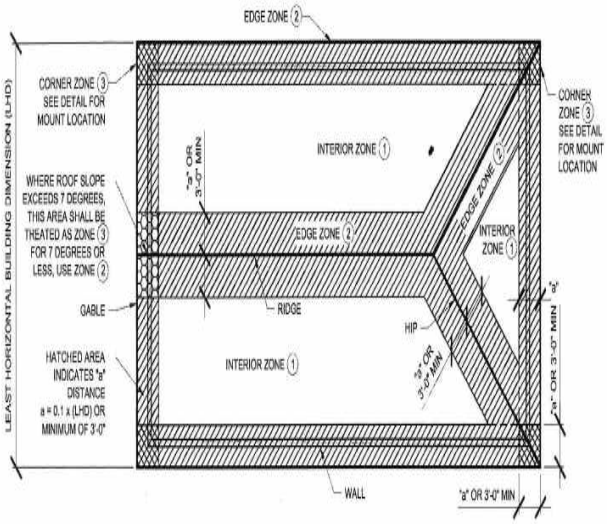

Figure 2: Roof Edge and Corner Zones

Design Responsibility:

These tables are intended to be used under the responsible charge of a registered design professional where required by the authority having jurisdiction. In all cases, these tables should be used under the direction of a design professional with sufficient structural engineering knowledge and experience to be able to:

- Evaluate whether these tables are applicable to the project, and
- Understand and determine the appropriate values for all input parameters of these tables.

This letter certifies that the SnapNrack Ultra Rail Flush-Mount Racking System, when installed according to the limitations of this letter and the attached span tables, is in compliance with the above codes and loading criteria. This certification excludes 1) evaluation of the building structure to support the loads imposed on the building by the array; including, but not limited to: strength and deflection of structural framing members, fastening and/or strength of roofing materials, and/or the effects of snow accumulation on the roof; and 2) excludes effects on building structural and architectural components. This requires additional knowledge of the building and is outside the scope of the certification of this racking system.

Appendix A: Snow Load Conversion

This appendix is applicable for Authorities Having Jurisdiction (AHJ's) with non-reducible snow loads for roof pitches under 45 degrees and roof pitches between 45 and 90 degrees.

Span tables were compiled utilizing ground snow load, which is reduced to flat roof snow for pitches under 45 degrees, and to sloped roof snow for roof pitches between 45 and 90 degrees. For AHJ's specifying minimum roof snow loads or non-reducible ground snow loads, the user shall convert the specified snow load to the equivalent ground snow load in the Snow Load Conversion Table below to utilize the SnapNrack Ultra Rail Flush-Mount Span Table(s).

Snow Load Conversion Table		
Specified Minimum Roof Snow Load (psf)	Equivalent Ground Snow Load (psf) for use in Span Table(s)	
	Roof Pitch: $0° \leq \theta < 45°$	Roof Pitch: $45° \leq \theta \leq 90°$
10	20	20
20	25	40
25	35	60
30	40	60
35	50	80
40	60	90
50	70	100
60	80	110
70	90	120
80	100	NA
90	120	NA
100	NA	NA
110	NA	NA
120	NA	NA

Table B: Conversion Table for Minimum Specified and/or Non-Reducible Snow Loads

Note: Calculated Snow Loads for roof-mounted solar photovoltaic installations assume Risk Category II.

Example Conversion

Given(s): AHJ requires minimum 30 psf roof snow load.
Existing roof pitch is 6 in 12 = 27°

Step 1) Locate specified roof snow load in column 1 (30 psf).

Step 2) Determine which Roof Pitch column applies. Column 2 applies for the given condition.

Step 3) Select 40 psf from column 2 as the equivalent ground snow load for use in the Span Table(s).

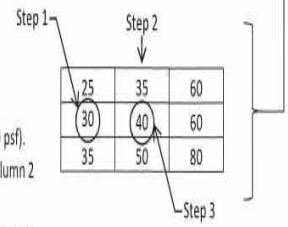

Appendix B: Oversized Modules

Certain commercially available solar photovoltaic modules exceed the maximum length limitations given on page 1 of this report. These span tables are based on the assumption of a solid contiguous panel, without any gaps to allow the equalization of wind pressures above and below the panel. Approved oversize modules, which are listed in this appendix, are permitted to be designed using the span tables in the report, provided that the gaps between the panels remain unobstructed.

The following modules may be designed in portrait orientation using the span tables for "60-cell" panels, provided that the gaps between the individual modules remain unobstructed:

Manufacturer:	Model Number:
LG	LGxxxN1C-V5
LG	LGxxxN1K-V5
LG	LGxxxN1T-V5
LG	LGxxxQ1C-V5
LG	LGxxxQ1K-V5
LG	LGxxxN1K-A5
LG	LGxxxQ1K-A5
LG	LGxxxS1C-A5
LG	LGxxxN1C-A5
LG	LGxxxQ1C-A5
Hanwha	Q.PEAK DUO BLK-G5
Hanwha	Q.PEAK DUO-G5
Panasonic	VBHN330SA17
Panasonic	VBHN325SA17

Table C1: Approved 60-Cell modules

Maximum Rail Spans (Inches)

SnapNrack UR-40 Rail Flush-Mount on 0 to 30 Foot Roof -- Bin 8 -- 60-Cell

Ground Snow Load	Exposure Category	Panel Angle	Wind Speed -> / Roof Zone ->	95 mph 1/2/3	100 mph 1/2/3	105 mph 1/2/3	110 mph 1/2/3	115 mph 1/2/3	120 mph 1/2/3	125 mph 1/2/3	130 mph 1/2/3	140 mph 1/2/3	150 mph 1/2/3	160 mph 1/2/3	170 mph 1/2/3	180 mph 1/2/3	190 mph 1/2/3
0 psf	B	0 to 7	Array Interior	83 / 83 / 74	83 / 80 / 71	83 / 78 / 69	83 / 75 / 67	83 / 73 / 64	78 / 70 / 61	76 / 68 / 58	74 / 67 / 56	70 / 63 / 52	67 / 57 / 48	63 / 54 / 45	59 / 50 / 42	56 / 47 / 40	53 / 45 / 38
			Array Edge	80 / 72 / 63	77 / 69 / 60	75 / 67 / 57	72 / 64 / 54	70 / 61 / 52	68 / 59 / 49	66 / 57 / 47	63 / 54 / 45	58 / 50 / 42	54 / 46 / 38	51 / 43 / 37	48 / 41 / 34	45 / 38 / 32	43 / 36 / 31
		7 to 20	Array Interior	84 / 76 / 71	84 / 73 / 68	82 / 70 / 66	79 / 68 / 63	76 / 66 / 60	74 / 63 / 57	72 / 60 / 55	70 / 58 / 53	66 / 54 / 49	62 / 50 / 45	58 / 47 / 42	54 / 44 / 40	51 / 41 / 38	48 / 39 / 36
			Array Edge	76 / 69 / 59	73 / 62 / 56	70 / 59 / 53	68 / 56 / 51	66 / 53 / 48	63 / 51 / 46	60 / 49 / 44	58 / 47 / 42	54 / 43 / 40	50 / 40 / 37	47 / 38 / 34	44 / 36 / 32	41 / 34 / 31	39 / 32 / 29
		20 to 27	Array Interior	84 / 81 / 78	84 / 78 / 78	84 / 75 / 73	84 / 73 / 71	84 / 70 / 68	82 / 68 / 66	80 / 66 / 64	77 / 64 / 61	73 / 59 / 57	70 / 55 / 53	67 / 51 / 49	63 / 48 / 46	59 / 45 / 44	56 / 43 / 41
			Array Edge	84 / 76 / 68	81 / 67 / 63	78 / 64 / 62	75 / 61 / 59	73 / 59 / 56	71 / 56 / 54	69 / 54 / 52	67 / 52 / 50	63 / 48 / 46	58 / 44 / 43	54 / 42 / 40	51 / 39 / 38	48 / 37 / 35	45 / 35 / 33
		27 to 45	Array Interior	85 / 85 / 80	85 / 84 / 77	84 / 81 / 75	81 / 78 / 72	78 / 76 / 70	76 / 73 / 68	74 / 71 / 66	72 / 69 / 63	68 / 66 / 59	65 / 61 / 55	61 / 57 / 51	57 / 54 / 48	54 / 51 / 45	51 / 48 / 43
			Array Edge	78 / 75 / 69	75 / 72 / 64	73 / 70 / 64	70 / 68 / 61	68 / 66 / 59	66 / 63 / 56	63 / 61 / 54	61 / 59 / 51	56 / 53 / 48	53 / 49 / 44	49 / 47 / 41	46 / 44 / 39	43 / 41 / 37	41 / 39 / 35
		45 to 90	Array Interior	86 / 86 / 86	86 / 86 / 86	86 / 86 / 86	86 / 86 / 86	86 / 85 / 85	85 / 83 / 83	85 / 80 / 80	83 / 76 / 76	80 / 70 / 70	76 / 71 / 71	73 / 68 / 68	71 / 64 / 64	67 / 61 / 61	64 / 57 / 57
			Array Edge	86 / 86 / 86	86 / 86 / 86	86 / 75 / 75	86 / 75 / 75	86 / 74 / 74	77 / 77 / 72	75 / 75 / 70	73 / 68 / 68	70 / 64 / 64	67 / 60 / 60	62 / 56 / 56	59 / 52 / 52	55 / 49 / 49	53 / 47 / 47
	C	0 to 7	Array Interior	83 / 74 / 65	79 / 71 / 62	77 / 69 / 59	74 / 66 / 56	72 / 64 / 53	70 / 61 / 51	68 / 58 / 49	66 / 56 / 47	61 / 52 / 44	56 / 48 / 41	53 / 45 / 38	49 / 42 / 36	47 / 40 / 34	44 / 38 / 32
			Array Edge	71 / 63 / 53	69 / 60 / 50	66 / 57 / 50	63 / 55 / 50	60 / 53 / 48	58 / 50 / 45	55 / 47 / 43	53 / 45 / 38	49 / 41 / 36	46 / 39 / 33	43 / 36 / 31	40 / 34 / 29	38 / 32 / 28	36 / 31 / 23
		7 to 20	Array Interior	76 / 67 / 61	75 / 64 / 58	72 / 61 / 55	70 / 58 / 53	68 / 55 / 50	65 / 53 / 48	63 / 51 / 46	60 / 49 / 44	56 / 45 / 41	52 / 42 / 38	48 / 39 / 36	45 / 37 / 34	42 / 34 / 31	39 / 32 / 29
			Array Edge	67 / 55 / 51	64 / 53 / 48	61 / 51 / 45	58 / 47 / 43	55 / 45 / 41	53 / 43 / 38	51 / 41 / 37	48 / 39 / 34	43 / 36 / 31	39 / 33 / 28	36 / 30 / 26	34 / 28 / 23	32 / 25 / 19	30 / 23 / 17
		20 to 27	Array Interior	77 / 74 / 71	74 / 71 / 68	72 / 69 / 65	69 / 66 / 63	67 / 63 / 60	64 / 61 / 57	62 / 58 / 54	59 / 55 / 51	54 / 51 / 45	50 / 46 / 42	46 / 42 / 38	43 / 38 / 34	40 / 35 / 31	37 / 32 / 28
			Array Edge	71 / 68 / 64	68 / 65 / 61	65 / 62 / 58	62 / 59 / 55	59 / 56 / 52	57 / 53 / 49	54 / 50 / 46	51 / 47 / 43	46 / 42 / 38	42 / 38 / 34	39 / 34 / 30	36 / 31 / 27	33 / 28 / 24	31 / 25 / 21
		27 to 45	Array Interior	84 / 71 / 70	83 / 69 / 67	80 / 67 / 64	77 / 64 / 61	75 / 61 / 58	73 / 58 / 56	70 / 56 / 53	69 / 53 / 51	61 / 49 / 46	50 / 46 / 44	50 / 43 / 42	53 / 40 / 39	50 / 38 / 37	47 / 36 / 35
			Array Edge	74 / 60 / 58	72 / 58 / 55	69 / 56 / 52	67 / 53 / 49	64 / 49 / 47	61 / 47 / 44	59 / 45 / 43	56 / 43 / 41	52 / 40 / 38	45 / 37 / 36	43 / 34 / 33	40 / 31 / 30	38 / 29 / 27	36 / 27 / 25
		45 to 90	Array Interior	80 / 77 / 71	77 / 74 / 69	74 / 72 / 66	72 / 69 / 63	70 / 67 / 60	68 / 65 / 58	66 / 62 / 55	63 / 60 / 53	58 / 55 / 49	53 / 49 / 45	49 / 45 / 41	45 / 41 / 38	42 / 38 / 34	39 / 35 / 31
			Array Edge	67 / 64 / 58	64 / 61 / 55	62 / 58 / 52	59 / 55 / 49	57 / 52 / 46	54 / 49 / 43	51 / 46 / 40	49 / 43 / 37	45 / 38 / 34	40 / 34 / 31	36 / 31 / 28	33 / 28 / 25	31 / 25 / 22	29 / 23 / 19
5 psf	B	0 to 7	Array Interior	83 / 83 / 74	83 / 80 / 71	83 / 78 / 69	83 / 75 / 67	83 / 73 / 64	78 / 70 / 61	76 / 68 / 58	74 / 67 / 56	70 / 63 / 52	67 / 57 / 48	63 / 54 / 45	59 / 50 / 42	56 / 47 / 40	53 / 45 / 38
			Array Edge	80 / 72 / 63	77 / 69 / 60	75 / 67 / 57	72 / 64 / 54	70 / 61 / 52	68 / 59 / 49	66 / 57 / 47	63 / 54 / 45	58 / 50 / 42	54 / 46 / 38	51 / 43 / 37	48 / 41 / 34	45 / 38 / 32	43 / 36 / 31
		7 to 20	Array Interior	84 / 76 / 71	84 / 73 / 68	82 / 70 / 66	79 / 68 / 63	76 / 66 / 60	74 / 63 / 57	72 / 60 / 55	70 / 58 / 53	66 / 54 / 49	62 / 50 / 45	58 / 47 / 42	54 / 44 / 40	51 / 41 / 38	48 / 39 / 36
			Array Edge	76 / 69 / 59	73 / 62 / 56	70 / 59 / 53	68 / 56 / 51	66 / 53 / 48	63 / 51 / 46	60 / 49 / 44	58 / 47 / 42	54 / 43 / 40	50 / 40 / 37	47 / 38 / 34	44 / 36 / 32	41 / 34 / 31	39 / 32 / 29
		20 to 27	Array Interior	84 / 81 / 78	84 / 78 / 78	84 / 75 / 73	84 / 73 / 71	84 / 70 / 68	82 / 68 / 66	80 / 66 / 64	77 / 64 / 61	73 / 59 / 57	70 / 55 / 53	67 / 51 / 49	63 / 48 / 46	59 / 45 / 44	56 / 43 / 41
			Array Edge	84 / 76 / 68	81 / 67 / 63	78 / 64 / 62	75 / 61 / 59	73 / 59 / 56	71 / 56 / 54	69 / 54 / 52	67 / 52 / 50	63 / 48 / 46	58 / 44 / 43	54 / 42 / 40	51 / 39 / 38	48 / 37 / 35	45 / 35 / 33
		27 to 45	Array Interior	85 / 85 / 80	85 / 84 / 77	84 / 81 / 75	81 / 78 / 72	78 / 76 / 70	76 / 73 / 68	74 / 71 / 66	72 / 69 / 63	68 / 66 / 59	65 / 61 / 55	61 / 57 / 51	57 / 54 / 48	54 / 51 / 45	51 / 48 / 43
			Array Edge	78 / 75 / 69	75 / 72 / 64	73 / 70 / 64	70 / 68 / 61	68 / 66 / 59	66 / 63 / 56	63 / 61 / 54	61 / 59 / 51	56 / 53 / 48	53 / 49 / 44	49 / 47 / 41	46 / 44 / 39	43 / 41 / 37	41 / 39 / 35
		45 to 90	Array Interior	86 / 86 / 86	86 / 86 / 86	86 / 86 / 86	86 / 86 / 86	86 / 85 / 85	85 / 83 / 83	85 / 80 / 80	83 / 76 / 76	80 / 70 / 70	76 / 71 / 71	73 / 68 / 68	71 / 64 / 64	67 / 61 / 61	64 / 57 / 57
			Array Edge	86 / 86 / 86	86 / 86 / 86	86 / 75 / 75	86 / 75 / 75	86 / 74 / 74	77 / 77 / 72	75 / 75 / 70	73 / 68 / 68	70 / 64 / 64	67 / 60 / 60	62 / 56 / 56	59 / 52 / 52	55 / 49 / 49	53 / 47 / 47
	C	0 to 7	Array Interior	83 / 74 / 65	79 / 71 / 62	77 / 69 / 59	74 / 66 / 56	72 / 64 / 53	70 / 61 / 51	68 / 58 / 49	66 / 56 / 47	61 / 52 / 44	56 / 48 / 41	53 / 45 / 38	49 / 42 / 36	47 / 40 / 34	44 / 38 / 32
			Array Edge	71 / 63 / 53	69 / 60 / 50	66 / 57 / 50	63 / 55 / 50	60 / 53 / 48	58 / 50 / 45	55 / 47 / 43	53 / 45 / 38	49 / 41 / 36	46 / 39 / 33	43 / 36 / 31	40 / 34 / 29	38 / 32 / 28	36 / 31 / 23
		7 to 20	Array Interior	76 / 67 / 61	75 / 64 / 58	72 / 61 / 55	70 / 58 / 53	68 / 55 / 50	65 / 53 / 48	63 / 51 / 46	60 / 49 / 44	56 / 45 / 41	52 / 42 / 38	48 / 39 / 36	45 / 37 / 34	42 / 34 / 31	39 / 32 / 29
			Array Edge	67 / 55 / 50	64 / 52 / 47	61 / 49 / 45	58 / 47 / 43	55 / 45 / 41	53 / 43 / 39	51 / 41 / 37	49 / 39 / 36	45 / 37 / 33	42 / 34 / 31	39 / 32 / 29	37 / 30 / 25	35 / 27 / 23	33 / 25 / 19
		20 to 27	Array Interior	84 / 71 / 70	83 / 69 / 67	80 / 67 / 64	77 / 64 / 61	75 / 61 / 58	73 / 58 / 56	70 / 56 / 53	69 / 53 / 51	61 / 49 / 46	50 / 46 / 44	50 / 43 / 42	53 / 40 / 39	50 / 38 / 37	47 / 36 / 35
			Array Edge	74 / 60 / 58	72 / 57 / 55	69 / 55 / 52	67 / 51 / 49	64 / 49 / 47	61 / 47 / 45	59 / 45 / 43	56 / 43 / 41	52 / 40 / 38	45 / 37 / 36	43 / 34 / 33	40 / 31 / 30	38 / 29 / 27	36 / 27 / 25
		27 to 45	Array Interior	80 / 77 / 71	77 / 74 / 69	74 / 72 / 66	72 / 69 / 63	70 / 67 / 60	68 / 65 / 58	66 / 62 / 55	63 / 60 / 53	58 / 55 / 49	53 / 49 / 45	49 / 45 / 41	45 / 41 / 38	42 / 38 / 34	39 / 35 / 31
			Array Edge	67 / 64 / 58	64 / 61 / 55	62 / 58 / 52	59 / 55 / 49	57 / 52 / 46	54 / 49 / 43	51 / 46 / 40	49 / 43 / 37	45 / 38 / 34	40 / 34 / 31	36 / 31 / 28	33 / 28 / 25	31 / 25 / 22	29 / 23 / 19
		45 to 90	Array Interior	86 / 83 / 83	86 / 83 / 83	86 / 83 / 83	86 / 83 / 83	86 / 82 / 82	85 / 80 / 80	85 / 77 / 77	83 / 73 / 73	80 / 68 / 68	76 / 64 / 64	73 / 61 / 61	71 / 58 / 58	67 / 55 / 55	64 / 52 / 52
			Array Edge	83 / 83 / 83	83 / 83 / 83	83 / 75 / 75	83 / 75 / 75	83 / 74 / 74	77 / 77 / 72	75 / 75 / 70	73 / 68 / 68	70 / 64 / 64	67 / 60 / 60	62 / 56 / 56	59 / 52 / 52	55 / 49 / 49	53 / 47 / 47
	D	0 to 7	Array Interior	74 / 69 / 60	71 / 67 / 57	73 / 64 / 54	70 / 61 / 51	68 / 58 / 49	65 / 56 / 47	63 / 53 / 45	60 / 51 / 43	56 / 47 / 40	52 / 44 / 37	48 / 41 / 35	45 / 39 / 33	43 / 37 / 31	40 / 35 / 29
			Array Edge	67 / 56 / 48	64 / 54 / 46	61 / 51 / 44	58 / 49 / 42	55 / 47 / 40	53 / 45 / 38	51 / 43 / 36	49 / 41 / 35	45 / 38 / 32	39 / 33 / 27	35 / 31 / 24	32 / 28 / 22	30 / 25 / 19	28 / 23 / 17
		7 to 20	Array Interior	72 / 62 / 55	70 / 59 / 53	68 / 56 / 51	66 / 53 / 48	63 / 51 / 46	60 / 48 / 44	57 / 46 / 42	55 / 43 / 41	51 / 41 / 38	46 / 36 / 33	42 / 33 / 31	38 / 31 / 28	36 / 29 / 24	34 / 26 / 21
			Array Edge	62 / 50 / 45	59 / 47 / 43	56 / 45 / 41	53 / 43 / 39	51 / 41 / 37	48 / 39 / 36	46 / 38 / 34	45 / 36 / 33	41 / 33 / 30	38 / 31 / 28	36 / 29 / 24	34 / 26 / 21	32 / 23 / 19	30 / 21 / 17
		20 to 27	Array Interior	83 / 67 / 65	78 / 64 / 62	75 / 61 / 59	73 / 58 / 56	70 / 56 / 53	68 / 53 / 51	66 / 51 / 48	64 / 49 / 47	59 / 45 / 44	55 / 42 / 41	51 / 39 / 38	48 / 37 / 36	45 / 35 / 34	43 / 33 / 32
			Array Edge	70 / 55 / 53	67 / 53 / 50	65 / 49 / 48	62 / 47 / 45	59 / 45 / 43	56 / 43 / 41	54 / 41 / 40	52 / 40 / 38	48 / 37 / 35	45 / 34 / 33	42 / 32 / 31	39 / 30 / 29	37 / 28 / 26	35 / 25 / 23
		27 to 45	Array Interior	75 / 73 / 67	73 / 70 / 64	70 / 68 / 61	68 / 65 / 58	66 / 62 / 56	63 / 60 / 53	60 / 57 / 51	58 / 55 / 49	54 / 51 / 45	50 / 47 / 43	47 / 44 / 39	44 / 41 / 37	41 / 39 / 35	39 / 37 / 33
			Array Edge	65 / 61 / 55	62 / 58 / 52	58 / 55 / 49	56 / 53 / 47	53 / 50 / 45	51 / 48 / 43	48 / 46 / 41	47 / 44 / 40	43 / 41 / 37	40 / 38 / 34	38 / 36 / 31	35 / 34 / 30	34 / 32 / 29	32 / 30 / 25
		45 to 90	Array Interior	86 / 82 / 82	86 / 82 / 82	86 / 82 / 82	86 / 82 / 82	86 / 81 / 81	85 / 79 / 79	83 / 76 / 76	81 / 73 / 73	77 / 66 / 66	73 / 61 / 61	69 / 57 / 57	66 / 54 / 54	62 / 50 / 50	59 / 47 / 47
			Array Edge	76 / 71 / 71	74 / 68 / 68	72 / 66 / 66	70 / 63 / 63	67 / 60 / 60	66 / 58 / 58	63 / 55 / 55	59 / 53 / 53	55 / 49 / 49	52 / 46 / 46	49 / 43 / 43	46 / 40 / 40	43 / 38 / 38	41 / 36 / 36

Maximum Rail Spans (Inches)

SnapNrack UR-40 Rail Flush-Mount on 0 to 30 Foot Roof -- Bin 8 -- Landscape

Ground Snow Load	Exposure Category	Panel Angle	Wind Speed -> / Roof Zone ->	95 mph 1/2/3	100 mph 1/2/3	105 mph 1/2/3	110 mph 1/2/3	115 mph 1/2/3	120 mph 1/2/3	125 mph 1/2/3	130 mph 1/2/3	140 mph 1/2/3	150 mph 1/2/3	160 mph 1/2/3	170 mph 1/2/3	180 mph 1/2/3	190 mph 1/2/3
0 psf	B	0 to 7	Array Interior	98 / 98 / 87	98 / 98 / 84	98 / 93 / 83	98 / 88 / 78	98 / 86 / 76	93 / 83 / 74	91 / 81 / 72	87 / 78 / 70	83 / 74 / 66	79 / 71 / 63	75 / 68 / 58	72 / 64 / 54	69 / 61 / 51	67 / 57 / 48
			Array Edge	95 / 85 / 75	91 / 82 / 73	88 / 79 / 70	85 / 76 / 68	83 / 74 / 66	80 / 72 / 63	78 / 70 / 61	76 / 68 / 58	72 / 64 / 54	68 / 58 / 50	65 / 56 / 47	61 / 52 / 44	58 / 49 / 42	54 / 47 / 39
		7 to 20	Array Interior	98 / 89 / 81	98 / 86 / 80	96 / 83 / 78	93 / 80 / 75	90 / 78 / 73	87 / 75 / 71	85 / 73 / 68	82 / 71 / 67	74 / 64 / 58	70 / 60 / 54	66 / 57 / 51	62 / 54 / 48	59 / 51 / 45	55 / 48 / 43
			Array Edge	89 / 77 / 72	86 / 74 / 70	83 / 72 / 67	80 / 70 / 65	78 / 67 / 62	75 / 65 / 59	73 / 63 / 57	71 / 60 / 55	68 / 56 / 51	64 / 52 / 47	60 / 48 / 44	56 / 46 / 41	53 / 43 / 39	50 / 41 / 37
		20 to 27	Array Interior	99 / 93 / 93	99 / 93 / 89	99 / 88 / 86	99 / 85 / 83	99 / 83 / 81	97 / 80 / 78	94 / 78 / 76	90 / 73 / 74	80 / 72 / 70	82 / 69 / 67	78 / 66 / 63	75 / 62 / 59	72 / 58 / 56	70 / 55 / 53
			Array Edge	99 / 82 / 80	99 / 79 / 77	92 / 77 / 74	89 / 74 / 72	86 / 72 / 70	83 / 70 / 68	81 / 68 / 66	79 / 66 / 63	75 / 61 / 59	72 / 57 / 55	68 / 54 / 51	65 / 50 / 48	61 / 47 / 45	58 / 45 / 43
		27 to 45	Array Interior	100 / 100 / 94	100 / 100 / 91	99 / 95 / 88	96 / 92 / 85	93 / 89 / 83	90 / 87 / 80	87 / 84 / 78	85 / 82 / 76	81 / 78 / 73	77 / 74 / 69	73 / 71 / 66	70 / 68 / 61	68 / 65 / 58	65 / 62 / 55
			Array Edge	92 / 88 / 83	89 / 85 / 78	86 / 82 / 76	83 / 80 / 74	80 / 77 / 72	78 / 75 / 68	76 / 73 / 68	74 / 71 / 66	70 / 67 / 61	67 / 64 / 57	63 / 60 / 53	59 / 56 / 50	56 / 53 / 47	53 / 50 / 44
		45 to 90	Array Interior	102 / 102 / 102	102 / 102 / 102	102 / 102 / 102	102 / 102 / 102	102 / 101 / 101	102 / 98 / 98	100 / 95 / 95	98 / 92 / 92	94 / 88 / 88	90 / 83 / 83	86 / 80 / 80	83 / 77 / 77	80 / 74 / 74	77 / 71 / 71
			Array Edge	102 / 100 / 100	102 / 96 / 96	99 / 93 / 93	95 / 90 / 90	93 / 87 / 87	91 / 85 / 85	89 / 82 / 82	87 / 80 / 80	83 / 76 / 76	79 / 73 / 73	75 / 69 / 69	72 / 67 / 67	70 / 63 / 63	67 / 60 / 60
	C	0 to 7	Array Interior	97 / 87 / 77	94 / 84 / 75	90 / 81 / 73	87 / 78 / 70	85 / 76 / 68	82 / 73 / 65	80 / 72 / 63	77 / 70 / 60	73 / 66 / 56	67 / 58 / 49	63 / 54 / 46	59 / 51 / 43	56 / 48 / 41	53 / 46 / 38
			Array Edge	84 / 75 / 67	81 / 73 / 64	78 / 70 / 61	75 / 68 / 58	73 / 66 / 55	71 / 63 / 53	69 / 60 / 51	67 / 58 / 49	63 / 54 / 45	58 / 50 / 41	55 / 47 / 39	51 / 44 / 37	48 / 41 / 35	46 / 39 / 33
		7 to 20	Array Interior	91 / 79 / 74	88 / 76 / 71	85 / 73 / 69	82 / 71 / 67	80 / 69 / 64	77 / 67 / 61	75 / 65 / 59	73 / 62 / 57	68 / 58 / 52	62 / 54 / 48	58 / 50 / 44	54 / 47 / 43	51 / 44 / 40	48 / 42 / 38
			Array Edge	79 / 68 / 63	76 / 66 / 60	74 / 63 / 57	71 / 60 / 55	69 / 57 / 52	67 / 55 / 50	65 / 53 / 48	62 / 50 / 46	58 / 47 / 43	54 / 44 / 40	50 / 41 / 37	47 / 38 / 35	44 / 36 / 33	42 / 34 / 31
		20 to 27	Array Interior	95 / 84 / 82	98 / 81 / 78	94 / 78 / 76	91 / 76 / 74	88 / 74 / 72	86 / 71 / 69	83 / 69 / 68	81 / 67 / 66	77 / 63 / 61	71 / 59 / 57	70 / 55 / 54	67 / 52 / 50	64 / 49 / 47	61 / 46 / 44
			Array Edge	87 / 73 / 71	84 / 70 / 68	81 / 68 / 66	79 / 66 / 63	75 / 63 / 60	74 / 60 / 58	72 / 58 / 55	70 / 55 / 53	66 / 51 / 48	62 / 46 / 46	58 / 45 / 43	55 / 42 / 40	52 / 40 / 38	49 / 38 / 36
		27 to 45	Array Interior	102 / 102 / 102	102 / 102 / 102	102 / 102 / 102	102 / 102 / 102	102 / 102 / 102	102 / 102 / 102	102 / 102 / 102	102 / 102 / 102	102 / 102 / 102	102 / 102 / 102	102 / 102 / 102	102 / 102 / 102	102 / 102 / 102	102 / 102 / 102
			Array Edge	94 / 91 / 87	91 / 87 / 81	88 / 84 / 78	85 / 81 / 76	83 / 79 / 73	80 / 77 / 70	78 / 75 / 69	76 / 73 / 68	72 / 69 / 63	68 / 65 / 59	65 / 62 / 56	61 / 58 / 52	58 / 55 / 49	55 / 52 / 46
		45 to 90	Array Interior	82 / 79 / 73	79 / 76 / 70	76 / 73 / 68	74 / 71 / 66	71 / 68 / 63	69 / 67 / 60	67 / 65 / 58	65 / 62 / 55	61 / 57 / 51	56 / 53 / 48	53 / 50 / 45	50 / 47 / 42	47 / 44 / 40	45 / 42 / 37
			Array Edge	102 / 102 / 102	103 / 99 / 99	103 / 95 / 95	98 / 90 / 90	93 / 87 / 87	91 / 84 / 84	88 / 82 / 82	86 / 79 / 79	81 / 74 / 74	77 / 71 / 71	74 / 68 / 68	70 / 64 / 64	67 / 60 / 60	64 / 57 / 57
	D	0 to 7	Array Interior	95 / 89 / 89	93 / 85 / 85	89 / 83 / 83	86 / 80 / 80	84 / 78 / 78	82 / 75 / 75	80 / 73 / 73	77 / 71 / 71	74 / 68 / 68	70 / 64 / 64	67 / 60 / 60	64 / 56 / 56	60 / 53 / 53	57 / 50 / 50
			Array Edge	85 / 82 / 73	83 / 79 / 70	80 / 77 / 68	82 / 74 / 66	80 / 71 / 64	77 / 69 / 61	75 / 67 / 59	73 / 65 / 57	69 / 61 / 53	65 / 57 / 49	61 / 54 / 46	58 / 50 / 43	54 / 47 / 40	51 / 44 / 37
		7 to 20	Array Interior	79 / 71 / 62	76 / 68 / 59	73 / 66 / 56	71 / 63 / 53	69 / 60 / 51	67 / 58 / 49	65 / 55 / 47	62 / 53 / 45	57 / 49 / 41	54 / 46 / 39	50 / 43 / 36	47 / 40 / 34	44 / 38 / 32	42 / 36 / 30
			Array Edge	62 / 70 / 60	61 / 67 / 58	59 / 64 / 56	57 / 61 / 54	55 / 59 / 51	53 / 56 / 49	51 / 54 / 47	49 / 52 / 45	46 / 48 / 42	43 / 45 / 39	40 / 42 / 36	37 / 39 / 34	35 / 37 / 32	33 / 35 / 30
		20 to 27	Array Interior	74 / 64 / 58	72 / 61 / 55	69 / 58 / 52	67 / 56 / 50	64 / 53 / 48	62 / 51 / 46	60 / 49 / 44	57 / 46 / 42	53 / 43 / 39	49 / 40 / 36	46 / 37 / 34	43 / 35 / 32	40 / 32 / 29	38 / 30 / 27
			Array Edge	72 / 61 / 53	69 / 58 / 52	67 / 55 / 50	63 / 52 / 48	60 / 50 / 45	58 / 48 / 43	56 / 45 / 41	54 / 43 / 40	49 / 40 / 36	45 / 37 / 34	42 / 34 / 31	39 / 32 / 29	36 / 29 / 26	34 / 27 / 24
		27 to 45	Array Interior	92 / 76 / 74	89 / 74 / 72	86 / 72 / 70	83 / 69 / 67	81 / 67 / 65	78 / 65 / 63	76 / 63 / 60	72 / 60 / 56	67 / 54 / 51	62 / 49 / 46	58 / 45 / 42	54 / 41 / 39	51 / 38 / 36	48 / 36 / 33
			Array Edge	82 / 69 / 67	79 / 66 / 64	77 / 63 / 61	74 / 60 / 58	72 / 58 / 55	70 / 55 / 53	68 / 53 / 51	66 / 51 / 48	61 / 47 / 45	57 / 44 / 42	53 / 41 / 39	50 / 38 / 37	47 / 36 / 35	45 / 34 / 33
		45 to 90	Array Interior	102 / 96 / 96	99 / 93 / 93	96 / 90 / 90	93 / 87 / 87	91 / 84 / 84	88 / 82 / 82	86 / 79 / 79	84 / 77 / 77	80 / 73 / 73	75 / 69 / 69	71 / 65 / 65	68 / 61 / 61	64 / 58 / 58	61 / 55 / 55
			Array Edge	95 / 89 / 89	92 / 85 / 85	89 / 83 / 83	86 / 80 / 80	84 / 78 / 78	82 / 75 / 75	80 / 73 / 73	77 / 71 / 71	74 / 68 / 68	70 / 64 / 64	67 / 60 / 60	64 / 56 / 56	60 / 53 / 53	57 / 50 / 50
5 psf	B	0 to 7	Array Interior	98 / 98 / 87	98 / 98 / 84	98 / 93 / 83	98 / 88 / 78	98 / 86 / 76	93 / 83 / 74	91 / 81 / 72	87 / 78 / 70	83 / 74 / 66	79 / 71 / 63	75 / 68 / 58	72 / 64 / 54	69 / 61 / 51	67 / 57 / 48
			Array Edge	95 / 85 / 75	91 / 82 / 73	88 / 79 / 70	85 / 76 / 68	83 / 74 / 66	80 / 72 / 63	78 / 70 / 61	76 / 68 / 58	72 / 64 / 54	68 / 58 / 50	65 / 56 / 47	61 / 52 / 44	58 / 49 / 42	54 / 47 / 39
		7 to 20	Array Interior	98 / 89 / 81	98 / 86 / 80	96 / 83 / 78	93 / 80 / 75	90 / 78 / 73	87 / 75 / 71	85 / 73 / 68	82 / 71 / 67	74 / 64 / 58	70 / 60 / 54	66 / 57 / 51	62 / 54 / 48	59 / 51 / 45	55 / 48 / 43
			Array Edge	89 / 77 / 72	86 / 74 / 70	83 / 72 / 67	80 / 70 / 65	78 / 67 / 62	75 / 65 / 59	73 / 63 / 57	71 / 60 / 55	68 / 56 / 51	64 / 52 / 47	60 / 48 / 44	56 /

POWERWALL

Tesla Powerwall is a fully-integrated AC battery system for residential or light commercial use. Its rechargeable lithium-ion battery pack provides energy storage for solar self-consumption, time-based control, and backup.

Powerwall's electrical interface provides a simple connection to any home or building. Its revolutionary compact design achieves market-leading energy density and is easy to install, enabling owners to quickly realize the benefits of reliable, clean power.

PERFORMANCE SPECIFICATIONS

AC Voltage (Nominal)	120/240 V
Feed-In Type	Split Phase
Grid Frequency	60 Hz
Total Energy	14 kWh
Usable Energy	13.5 kWh
Real Power, max continuous	5 kW (charge and discharge)
Real Power, peak (10 s, off-grid/backup)	7 kW (charge and discharge)
Apparent Power, max continuous	5.8 kVA (charge and discharge)
Apparent Power, peak (10 s, off-grid/backup)	7.2 kVA (charge and discharge)
Maximum Supply Fault Current	10 kA
Maximum Output Fault Current	32 A
Overcurrent Protection Device	30 A
Imbalance for Split-Phase Loads	100%
Power Factor Output Range	+/- 1.0 adjustable
Power Factor Range (full-rated power)	+/- 0.85
Internal Battery DC Voltage	50 V
Round Trip Efficiency[1,3]	90%
Warranty	10 years

[1]Values provided for 25°C (77°F), 3.3 kW charge/discharge power.
[2]In Backup mode, grid charge power is limited to 3.3 kW.
[3]AC to battery to AC, at beginning of life.

COMPLIANCE INFORMATION

Certifications	UL 1642, UL 1741, UL 1973, UL 9540, IEEE 1547, UN 38.3
Grid Connection	Worldwide Compatibility
Emissions	FCC Part 15 Class B, ICES 003
Environmental	RoHS Directive 2011/65/EU
Seismic	AC156, IEEE 693-2005 (high)

MECHANICAL SPECIFICATIONS

Dimensions[1]	1150 mm x 755 mm x 147 mm (45.3 in x 29.6 in x 5.75 in)
Weight[1]	114 kg (251.3 lbs)
Mounting options	Floor or wall mount

[1]Dimensions and weight differ slightly if manufactured before March 2019. Contact Tesla for additional information.

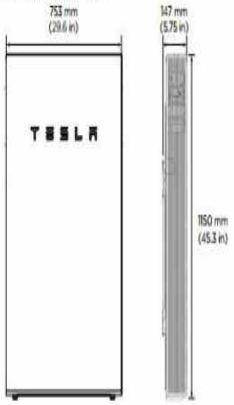

ENVIRONMENTAL SPECIFICATIONS

Operating Temperature	-20°C to 50°C (-4°F to 122°F)
Recommended Temperature	0°C to 30°C (32°F to 86°F)
Operating Humidity (RH)	Up to 100%, condensing
Storage Conditions	-20°C to 30°C (-4°F to 86°F) Up to 95% RH, non-condensing State of Energy (SoE): 25% initial
Maximum Elevation	3000 m (9843 ft)
Environment	Indoor and outdoor rated
Enclosure Type	NEMA 3R
Ingress Rating	IP67 (Battery & Power Electronics) IP56 (Wiring Compartment)
Wet Location Rating	Yes
Noise Level @ 1m	< 40 dBA at 30°C (86°F)

AUTHORIZATION TO MARK

This authorizes the application of the Certification Mark(s) shown below to the models described in the Product(s) Covered section when made in accordance with the conditions set forth in the Certification Agreement and Listing Report. This authorization also applies to multiple listee model(s) identified on the correlation page of the Listing Report.

This document is the property of Intertek Testing Services and is not transferable. The certification mark(s) may be applied only at the location of the Party Authorized To Apply Mark.

Applicant:	Tesla Motors, Inc	**Manufacturer:**	Tesla Motors, Inc
Address:	3500 Deer Creek Road, Palo Alto, CA 94304	**Address:**	Electric Avenue Sparks, Nevada 89434
Country:	USA	**Country:**	USA
Contact:	Mr. Jonathan McCormick	**Contact:**	John Paul Jose
Phone:	(650) 391-7144	**Phone:**	(775) 276-7604
FAX:	NA	**FAX:**	NA
Email:	jmccormick@tesla.com	**Email:**	jojose@teslamotors.com

Party Authorized To Apply Mark: Same as Manufacturer
Report Issuing Office: Cortland NY 13045

Control Number: 5005998 **Authorized by:** Edward Kelly Jr

for Dean Davidson, Certification Manager

This document supersedes all previous Authorizations to Mark for the noted Report Number.

This Authorization to Mark is for the exclusive use of Intertek's Client and is provided pursuant to the Certification agreement between Intertek and its Client. Intertek's responsibility and liability are limited to the terms and conditions of the agreement. Intertek assumes no liability to any party, other than to the Client in accordance with the agreement, for any loss, expense or damage occasioned by the use of this Authorization to Mark. Only the Client is authorized to permit copying or distribution of this Authorization to Mark and then only in its entirety. Use of Intertek's Certification mark is restricted to the conditions laid out in the agreement and in this Authorization to Mark. Any further use of the Intertek name for the sale or advertisement of the tested material, product or service must first be approved in writing by Intertek. Initial Factory Assessments and Follow up Services are for the purpose of assuring appropriate usage of the Certification mark in accordance with the agreement, they are not for the purposes of production quality control and do not relieve the Client of their obligations in this respect.

Intertek Testing Services NA Inc.
545 East Algonquin Road, Arlington Heights, IL 60005
Telephone 800-345-3851 or 847-439-5667 Fax 312-283-1672

Standard(s):	Inverters, Converters, Controllers And Interconnection System Equipment For Use With Distributed Energy Resources [UL 1741:2010 Ed.2 +R:07Sep2016] Standard For Energy Storage Systems And Equipment [ANSI/CAN/UL 9540:2016 Ed.1]
Product:	AC Powerwall
Models:	AC Powerwall 2.0

intertek
Total Quality. Assured.

Intertek
3933 US Route 11
Cortland, NY 13045
Telephone: 607-753-7311
www.intertek.com

Verification of Conformity

On the basis of the evaluations undertaken, the sample(s) of the below product have been found to comply with the requirements of the referenced specifications at the time the tests were carried out.

Applicant Name & Address	:	Tesla Motors Inc. 3500 Deer Creek Road, Palo Alto, CA 94304
Product(s) Tested	:	AC Powerwall
Ratings and principal characteristics	:	See Page 2
Model(s)	:	1092170-xx-y
Brand name/Firmware version	:	Tesla/926d037
Relevant Standard(s)/Specification(s)	:	UL 1741 Supplement SA – Grid Support Utility Interactive Inverters and Converters, Sept. 7, 2016 with the source requirements document (SRD) v1.1–Hawaii Rule No. 14H Interconnection of Distributed Generating Facilities with the Company's Distribution System Electric Rule No.21 Generating Facility Interconnections
Verification Issuing Office Name & Address	:	Intertek, 3933 US Route 11, Cortland, NY 13045, USA
Date of Test(s)	:	08/17/2017 to 09/29/2017
Verification/Report Number(s)	:	102591059CRT-046a

NOTE: This verification is part of the full test report(s) and should be read in conjunction with it.

This Verification is for the exclusive use of Intertek's client and is provided pursuant to the agreement between intertek and its Client. Intertek's responsibility and liability are limited to the terms and conditions of the agreement. Intertek assumes no liability to any party, other than to the Client in accordance with the agreement, for any loss, expense or damage occasioned by the use of this Verification. Only the Client is authorized to permit copying or distribution of this Verification. Any use of the Intertek name or one of its marks for the sale or advertisement of the tested material, product or service must first be approved in writing by Intertek. The observations and test/inspection results referenced in this Verification are relevant only to the sample tested/inspected. This Verification by itself does not imply that the material, product, or service is or has ever been under an intertek certification program.

Signature

Name: Howard Liu
Position: Engineering Team Leader
Date: October 2nd 2017

Ratings:

Nominal AC output voltage	240 V (Split phase)
Output Freq	60 Hz
Output Power	5.8 kVA
AC Input Voltage	228-252 V
Max. Cont. AC Input/ Output Current	20.83A
AC Input Frequency	60Hz
FW	926d037

Manufacturer's Stated Accuracy

Tesla states the following accuracies according to the requirements of UL1741 SA.

Manufacturer's Stated Accuracy

Description	
Manufacturer's stated AC voltage accuracy (Vac)	4.8Vac
Manufacturer's stated DC voltage accuracy (Vdc)	N/A
Manufacturer's stated AC current accuracy (Aac)	0.417A
Manufacturer's stated frequency measurement accuracy (Hz or %Hz)	0.05Hz
Manufacturer's stated output power accuracy (W or %W)	250W
Manufacturer's stated reactive power accuracy (% or Var)	250Var
Manufacturer's stated power factor accuracy	0.04
Manufacturer's stated time accuracy (sec)	0.1sec

Grid Support Function Parameters

Tesla used the following parameters during the testing of the grid support functions according to UL1741 SA. The parameters that have N/A as their value are not applicable.

SA11 Normal Ramp Parameters

Description	Value
Output current rating (Aac)	20.83
Minimum normal ramp-up rate (%I_{rated} / sec)	1
Maximum normal ramp-up rate (%I_{rated} / sec)	100
Output current range of function (%I_{rated})	0% to 100%
Ramp rate accuracy (%I_{rated} / sec)	2%

SA11 Soft-Start Ramp Parameters

Description	Value
Output current rating (Aac)	20.83
Minimum soft-start ramp-up rate (%I_{rated} / sec)	0.1
Maximum soft-start ramp-up rate (%I_{rated} / sec)	100
Output current range of function (%I_{rated})	0% to 100%
Ramp rate accuracy (%I_{rated} / sec)	2%

TESLA

March 30, 2017

Tesla Powerwall Hardware Compliance Letter

To whom it may concern:

The installation manual for the Tesla Powerwall was reviewed for mounting considerations. Based on the weight of the unit and the attachment layout of the mounting bracket, it was determined that the following fasteners should be used:

Wood Studs:
(4) – ¼" wood screws with w/ 2-1/2" minimum embedment

Metal Studs:
(3) – ¼" sheet metal screws at each corner w/ 1-1/2" minimum penetration (25 ga stud minimum)
(1) – ¼" sheet metal screws at each corner w/ 1-1/2" minimum penetration (18 ga stud and thicker)

Concrete/CMU:
Schedule "A" for clear height less than 2'-9"

FASTENER SCHEDULE "A"*			
MANUF	MODEL	DIAMETER	EMBEDMENT
SIMPSON	TITEN	¼"ø	1½"
HILTI	KWIK-CONN II +	¼"ø	1½"
POWERS	TAPPER +	¼"ø	1½"

Schedule "B" for clear height greater than 2'-9" and/or if the governing jurisdiction requires fastener ESR report*.

FASTENER SCHEDULE "B"*				
MANUF	MODEL	DIAMETER	EMBEDMENT	ESR#
SIMPSON	TITEN HD	⅜"ø	2¾"	ESR-2713 (CONCRETE) & ESR-1056 (CMU)
HILTI	KH-EZ	⅜"ø	1⅝"	ESR-3027 (CONCRETE) & ESR-3056 (CMU)
POWERS	WEDGEBOLT +	⅜"ø	1½"	ESR-2526 (CONCRETE) & ESR-1678 (CMU)

*See page 7 of the attached details

The following details are provided for guidance with various mounting configurations.

Sincerely,

Bryan McDonald, PE
Sr. Structural Design Engineer

REGISTERED PROFESSIONAL ENGINEER
BRYAN N. MCDONALD
C 80064
EXP. 9/30/18
CIVIL
STATE OF CALIFORNIA

TESLA MOTORS, INC 3500 Deer Creek Rd, Palo Alto, CA 94304 p 650.681.5000 f 650.681.5200

GENERAL NOTES

1. ATTACHED DETAILS HAVE BEEN DEVELOPED TO COVER MOST INSTALLATIONS IN THE 50 UNITED STATES. FOR CONDITIONS NOT COVERED HERE, CONSULT WITH A LOCAL ENGINEER OR YOUR TESLA CONTACT.
2. ALL FASTENERS SHALL BE GALVANIZED OR STAINLESS STEEL FOR EXTERIOR APPLICATIONS.
3. THE MAXIMUM EQUIPMENT WEIGHT IS 275 LBS.
4. THE VALUES OF a_p, R_p, AND I_p ARE 1.0, 2.5, AND 1.0 RESPECTIVELY, AS PROVIDED IN ASCE 7-10.
5. THE PEAK GROUND ACCELERATION (S_S) USED IN THE CALCULATIONS IS 3.73g.
6. POWERWALL ANCHORAGE DESIGN HEREIN IS BASED ON THE 2015 INTERNATIONAL BUILDING CODE (2015 IBC) – CHAPTER 16 AND ASCE 7-10 SECTIONS 12 & 13.
7. SNOW LOADS ARE BASED ON TABLE 7-1 AND FIGURE 7-1 PER ASCE 7-10.
8. WIND SPEEDS ARE BASED ON FIGURE 26.5-1A PER ASCE 7-10.
9. WATERPROOFING FOR ALL EXTERIOR APPLICATIONS SHALL BE PROVIDED BY THE INSTALLER/OWNER.
10. OWNER SHALL VERIFY WALL/BUILDING IS STRUCTURALLY ADEQUATE TO SUPPORT POWERWALL UNIT. WHERE OWNER WOULD LIKE TO ADD SUPPLEMENTAL WALL STUDS TO AVOID LOADING EXISTING WALL,
    AT METAL STUD CONSTRUCTION: USE 2½"x2"x16 GA. STUDS MIN, W/MAX HT. = 12'-0"
    AT WOOD CONSTRUCTION: ADD ADDITIONAL WALL STUD TO MATCH EXISTING CONSTRUCTION.
11. SEE FLOW CHART ON PAGE 3 FOR APPLICATION INSTRUCTIONS.

TESLA POWERWALL	GENERAL NOTES SHEET		
	03/30/17	SCALE N/A	Sheet 2/10

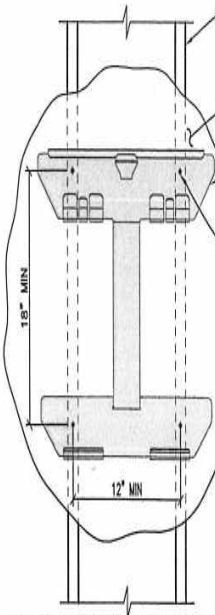

WOOD STUD ATTACHMENT: FRONT VIEW (W1)

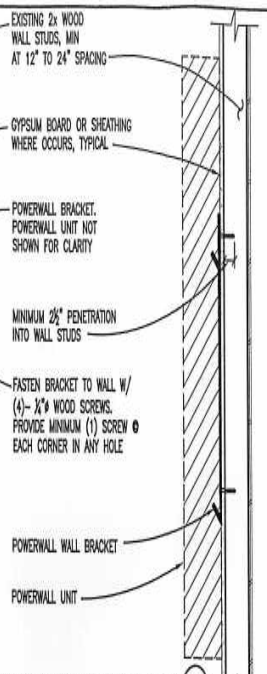

WOOD STUD ATTACHMENT: SIDE VIEW (W2)

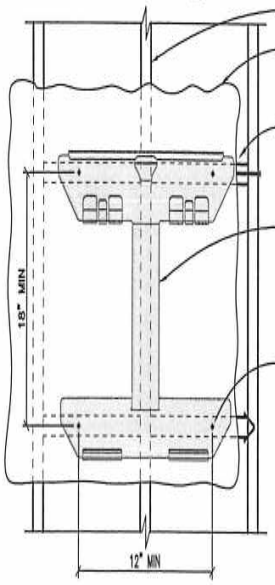

WOOD STUD, W/ BLOCKING: FRONT VIEW (W3)

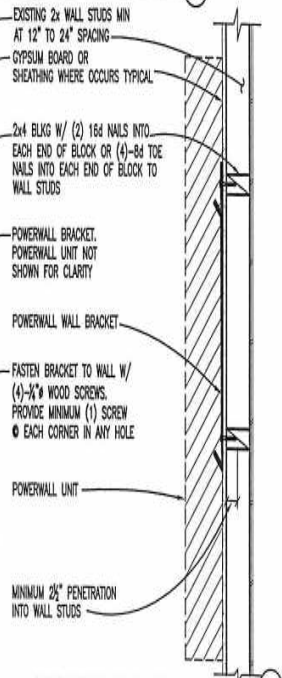

WOOD STUD, W/ BLOCKING: SIDE VIEW (W4)

NOTE: SEE GENERAL NOTES ON SHEET 2.

BRACKET ATTACHMENT TO WOOD STUD	DATE: 05/25/2017	SCALE: 1"=1'-0"
TESLA POWERWALL	DWG. NO.	SHEET 4 OF 11

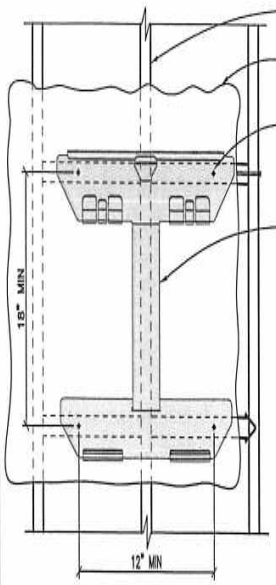

FRONT VIEW (G1)

NOTE: SEE GENERAL NOTES ON SHEET 2.

ANCHORAGE TABLE

WALL CONSTRUCTION TYPE	DETAIL REFERENCE
WOOD	W1/4 W3/4
METAL STUD	MSS/6
PLYWOOD	P1/10
CONCRETE/CMU	C3/10
UNISTRUT ATTACHMENT	U1/8 U3/9

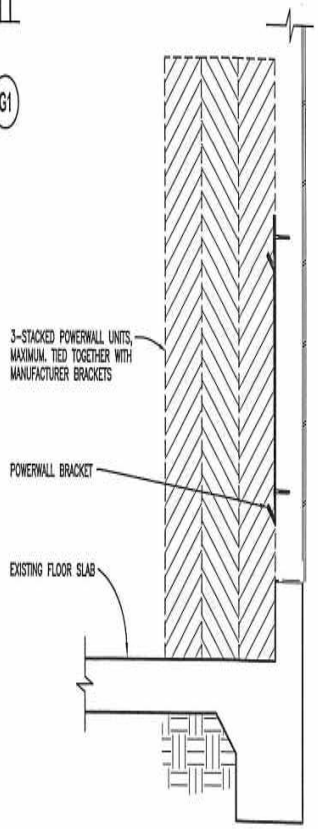

WOOD STUD, W/ BLOCKING: SIDE VIEW (G2)

NOTE: DETAIL APPLICABLE ONLY AT GROUND-MOUNTED, INTERIOR CONDITIONS

3-STACKED, GROUND-MOUNTED CONFIGURATION	DATE: 05/25/2017	SCALE: 1"=1'-0"
TESLA POWERWALL	DWG. NO.	SHEET 11 OF 11

POWERWALL

Backup Gateway

The Backup Gateway for Tesla Powerwall provides energy management and monitoring for solar self-consumption, load shifting, and whole-home or partial-home backup.

The Backup Gateway controls connection to the grid, automatically detecting outages and providing a seamless transition to backup power. When equipped with a circuit breaker, the Backup Gateway can be installed at the service entrance.

The Backup Gateway communicates directly with Powerwall, allowing you to monitor home energy use and manage backup energy reserves from any mobile device with the Tesla app.

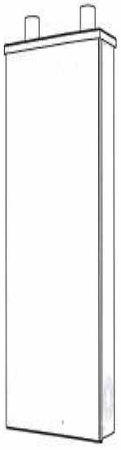

PERFORMANCE SPECIFICATIONS

AC Voltage (Nominal)	230 V, 120/240 V
Feed-In Type	Single & Split Phase
Grid Frequency	50 and 60 Hz
Disconnect Current	200 A
Maximum Input Short Circuit Current	10 kA
Overcurrent Protection Device[1]	100–200 A; Service Entrance Rated
Overvoltage Category	Category III
AC Meter	Revenue grade (+/– 1%)
Connectivity	Ethernet, Cellular (3G), Wi-Fi
User Interface	Tesla App
Operating Modes	Support for solar self-consumption, load shifting, and backup
Backup Operation	Automatic disconnect for seamless backup transition
Modularity	Supports up to 10 AC-coupled Powerwalls
Warranty	10 years

[1] Circuit breaker required for installation at service entrance

MECHANICAL SPECIFICATIONS

Dimensions	740 mm x 378 mm x 129 mm (29.1 in x 14.9 in x 5.1 in)
Weight	16.4 kg (36 lbs)
Mounting options	Wall mount

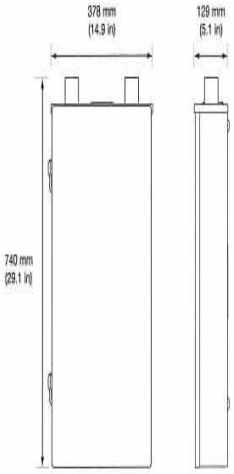

COMPLIANCE INFORMATION

Certifications	UL 1642, UL 1741, IEC 61000-6-3, IEC 62109-1, CSA C22.2 107.1, EN 55024, EN 301 489-1, EN 301 489-7, EN 301 489-17
Grid Connection	Worldwide Compatibility
Emissions	FCC Part 15 Class B, ICES 003
Environmental	RoHS Directive 2011/65/EU, WEEE Directive 2012/19/EU, Battery Directive 2006/66/EC
Seismic	AC156, IEEE 693-2005 (high)

ENVIRONMENTAL SPECIFICATIONS

Operating Temperature	-20°C to 50°C (-4°F to 122°F)
Operating Humidity (RH)	Up to 100%, condensing
Maximum Elevation	3000 m (9843 ft)
Environment	Indoor and outdoor rated
Enclosure Type	NEMA 3R
Ingress Rating	IP44
Pollution Degree Rating	PD3

Intertek

AUTHORIZATION TO MARK

This authorizes the application of the Certification Mark(s) shown below to the models described in the Product(s) Covered section when made in accordance with the conditions set forth in the Certification Agreement and Listing Report. This authorization also applies to multiple listee model(s) identified on the correlation page of the Listing Report.

This document is the property of Intertek Testing Services and is not transferable. The certification mark(s) may be applied only at the location of the Party Authorized To Apply Mark.

Applicant:	Tesla Motors, Inc.	**Manufacturer:**	Tesla Motors, Inc.
Address:	3500 Deer Creek Road Palo Alto, CA 94304	**Address:**	Electric Avenue Sparks, Nevada 89434
Country:	USA	**Country:**	USA
Contact:	Jonathan McCormick	**Contact:**	Jon Paul Jose
Phone:	(650) 391-7144	**Phone:**	775-276-7604
FAX:	NA	**FAX:**	NA
Email:	jmccormick@teslamotors.com	**Email:**	jojose@teslamotors.com

Party Authorized To Apply Mark: Same as Applicant

Report Issuing Office: Cortland, NY

Control Number: 5005998 **Authorized by:** Maggie Bowerstock

for Dean Davidson, Certification Manager

C ETL LISTED US

Intertek

This document supersedes all previous Authorizations to Mark for the noted Report Number.

This Authorization to Mark is for the exclusive use of Intertek's Client and is provided pursuant to the Certification agreement between Intertek and its Client. Intertek's responsibility and liability are limited to the terms and conditions of the agreement. Intertek assumes no liability to any party, other than to the Client in accordance with the agreement, for any loss, expense or damage occasioned by the use of this Authorization to Mark. Only the Client is authorized to permit copying or distribution of this Authorization to Mark and then only in its entirety. Use of Intertek's Certification mark is restricted to the conditions laid out in the agreement and in this Authorization to Mark. Any further use of the Intertek name for the sale or advertisement of the tested material, product or service must first be approved in writing by Intertek. Initial Factory Assessments and Follow up Services are for the purpose of assuring appropriate usage of the Certification mark in accordance with the agreement, they are not for the purposes of production quality control and do not relieve the Client of their obligations in this respect.

Intertek Testing Services NA Inc.
545 East Algonquin Road, Arlington Heights, IL 60005
Telephone 800-345-3851 or 847-439-5667 Fax 312-283-1672

Standard(s):	Inverters, Converters, Controllers And Interconnection System Equipment For Use With Distributed Energy Resources [UL 1741:2010 Ed.2 +R:07Jan2015] General Use Power Supplies (R2011) [CSA C22.2#107.1:2001 Ed.3]
Product:	Energy Gateway - Backup
Brand Name:	Tesla
Models:	1118431-00-A

EATON 200A (PROTECTED LOADS SUB PANEL)

EATON

200 AMPS MAX. - SEE MAIN BREAKER RATING
200 AMPS MAX. BUS RATING
120/240 VAC/VCA 1PH-3W; *1 FASE - 3 HILOS,*
208Y/120 VAC/VCA - 3W; *3 HILOS.*

SEE CASE SIDEWALL FOR FURTHER INFORMATION.
PARA INFORMACION ADICIONAL VEA LA PARED LATERAL DEL GABINETE Y EL REVERSO DE LA CUBRIETO DE LOS INTERRUPTORES.

THE PANEL RATING IS THAT OF THE MAIN BREAKER

MAXIMUM SUM OF BREAKER RATINGS PER STAB: 200A

BREAKER HANDLE IN MID-POSITION INDICATES BREAKER IS TRIPPED. TO RESTORE SERVICE, MOVE HANDLE TO EXTREME "OFF", THEN TO "ON".

USE TYPE BD, BJ, BJH, BQ, BQC, BR, BRAF, BRD, BRH, BRO, BRSN, BRWH, GFCB, GFEP OR GFCBH CIRCUIT BREAKERS.

FOR BACKFED MAIN BREAKER HOLD DOWN KIT USE CAT # BRHDK125
FOR FILLER PLATE TO CLOSE UNUSED COVER OPENINGS USE CAT # BRFP
FOR MAIN LUG KIT FOR CONVERTIBLE PANELS USE CAT # BRS225
FOR MAIN BREAKER USE TYPE BW, BWH, CSR OR CSH
FOR SUBFEED LUG KIT USE CAT # BRS225
FOR ADDITIONAL #6-2/0 NEUTRAL / GROUND LUGS USE CAT # NL20
FOR ADDITIONAL #6-300mcm NEUTRAL / GROUND LUGS USE CAT # NL300
FOR MECHANICAL INTERLOCK KIT USE CAT # BRMIKCSR
FOR GROUND BARS USE TYPE # GBK

WHEN USED AS SERVICE EQUIPMENT, ANY UNUSED NEUTRAL HOLES MAY BE USED FOR EQUIPMENT GROUNDING. FOR EQUIPMENT GROUNDING, WIRE HOLES ARE SUITABLE FOR (1) $14-4 OR UP TO (3) #14-10 WIRES. MULTIPLE WIRES IN THE SAME HOLE MUST BE THE SAME SIZE AND MATERIAL.

ADDITIONAL OR REPLACEMENT BREAKERS SHALL BE OF THE SAME MANUFACTURER AND TYPE AND SHALL HAVE AN INTERRUPTING RATING EQUAL TO OR GREATER THAN THE INTERRUPTING RATING OF ANY CIRCUIT BREAKER INSTALLED.
LOS INTERRUPTORES ADICIONALES ó DE REPUESTO DENERAN SER DEL MISMO TIPO U FAVRICANTE Y DEVERAN TENER UNA CAPACIDAD INTERRUPTIVA EQUAL A ó MAYOR QUE LA CAPACIDAD INTERRUPTIVA DE CUALQUIER INTERRUPTOR DE CIRCUITO INSTALACO.

PANELS WITH INSULATED NEUTRAL: SUITABLE FOR USE AS SERVICE EQUIPMENT WHEN NOT MORE THAN SIX MAIN DISCONNECTING MEANS ARE PROVIDED. **PANELS WITH FACTORY BONDED NEUTRAL:** SUITABLE ONLY FOR USE AS SERVICE EQUIPMENT. INSTALL NO MORE THAN SIX MAIN DISCONNECTING MEANS.

PUB26542 MADE IN USA ; *HECHO EN EUA* REV. 005

FOR RAINPROOF FITTINGS, (ON NEMA 3R DEVICES ONLY) REFER TO TABLE BELOW.
PARA ACCESORIO A PRUEBA DE LLUVIA (SOLAMENTE EN APARATOS NEMA 3R) CONSULTE LA SIGUIENTE TABLA.

HUB SIZE *TAMANO DE CAMPANA*	CATALOG NUMBER
3/4" (19.05mm)	DS075H1
1" (25.40mm)	DS100H1
1-1/4" (31.75mm)	DS125H1
1-1/2" (38.10mm)	DS150H1
2" (50.80mm)	DS200H1
2" (50.80mm)	DS200H2
2-1/2" (63.50mm)	DS250H2
3" (76.20mm)	DS300H2

TORQUE CIRCUIT BREAKER LUGS TO VALUES SPECIFIED ON CIRCUIT BREAKERS.
APRIETE LAS TERMINALES DEL INTERRUPTOR A LOS VALORES DE TORQUE ESPECIFICADOS EN EL INTERRUPTOR.

TERMINALS OTHER THAN BREAKER TERMINALS SUITABLE FOR 60/75°C AL-CU WIRE. BREAKER TERMINALS SUITABLE FOR AL-CU WIRE WHEN SO MARKED. REFER TO MARKINGS ON BREAKERS.

WIRE SIZE CABLE/ *CALIBRE* 60/75° C AL-CU AWG/ KCMIL	NEUTRAL & GROUND BAR *NEUTRO Y BARRRA DE CONEXION A TIERRA* LB-IN (N-M)	GROUND LUG (G1) & NEUTRAL LUG (N2) *TERMINAL DE CONEXION A TIERRA (G1) Y NEUTRO (N2)* LB-IN (N-M)	PANEL LUGS (A & B) & MAIN NEUTRAL (N1) *TERMINALES DEL PANEL (A&B) Y NEUTRO PRINCIPAL (N1)* LB-IN (N-M)
#14-10	20 (2.26)	-	-
#8	25 (2.82)	-	-
#6-4	35 (3.96)	45 (5.08)	-
#3-2/0	-	50 (5.65)	-
#6-300	-	-	225 (25.42)

SERIES CONNECTED SHORT CIRCUIT RATING; *CAPACID DE CORTO CIRCUITO CONECTADO EN SERIE*

MAIN DISCONNECT EATON *DESCONECTADOR PRINCIPAL*	FEEDER BREAKER / *ALIMENTADOR DEL TABLERO DE DISTRIBUCION* EATON BREAKER TYPES (INTEGRAL OR REMOTE) / *INTERRUPTOR DE CIRCUITO (INTERGRAL ó REMOTO)* TYPE; *TIPO*	LOADCENTER BRANCH BREAKER, EATON TYPE *INTERRUPTOR DERIVADO DE CENTRO DE CARGA* TYPE; *TIPO*	MAXIMUM SHORT CIRCUIT CURRENT RATING *CAPACIDAD DE CORTO CIRCUITO MAXIMA 240 VAC/VCA MAX*
NONE; *NINGUNO*	NONE; *NINGUNO*	SEE (1) / VER (1)	10,000
		BRH	22,000
	BRH (22K)	BR, BRAF,BRH, GFCB	22,000
	ED, BRX (65K)		65,000
	EDC, EDH, CHH (100K)		100,000
	T-FUSE / J-FUSE 200A MAX (100K)	BR	100,000
	CC (10K)	BR, BRAF, GFCB	10,000
	T-FUSE / J-FUSE 200A MAX (100K)	BRD, GFCB	65,000
T-FUSE 600A MAX (100K)	BR, CC (10K)	BR	65,000
J-FUSE 400A MAX (100K)	BR, CC (10K)	BR	65,000
TERMINAL BOX; *CASA TERMINALES*	BR, BW (10K)	SEE (1) / VER (1)	10,000
	BRH (22K)		22,000
	CHH-H2, BWH, CSR, CCVH (25K)		25,000
	CV, KD, HKD (65K)		65,000
	BRHH, CHH-H4, CVS (42K)		42,000
	CHH, CVH, KDC (100K)		100,000
SWITCH *INTERRUPTOR* CLASS T-FUSE 1200A MAX CLASS L-FUSE 1200-1600A MAX *FUSIBLE CLASE T 1200A MAX FUSIBLE CLASE L 1200-1600A MAX* CIRCUIT BREAKER *INTERRUPTORES D CIRCUITO KD, HKD - 400 A MAX LD, HLD - 600 A MAX MD, HMD, MDL, HMDL - 800A MAX ND, NGS, HND, NGH - 1200 A MAX RD, RGH - 2000 A MAX*	BR, CC, BW, CCV (10K)	SEE (1) / VER (1)	10,000
	BRH (22K)		22,000 (2)
	CHH-H2, BWH, CSR, CCVH (25K)		25,000
	BRHH, CHH-H4, CVS (42K)		42,000 (3)
	CV, KD, HKD (65K)		65,000
	CHH, CVH, KDC (100K)		100,000 (4)

(1) BD, BR, BRAF, BRD, BQ, BQC, GFCB. (2) 100,000 WITH CLASS T-FUSE, 600 AMP MAXIMUM.
(3) 100,000 WITH CLASS T-FUSE, 1200 AMP MAXIMUM.
(4) 100,000 WITH 100,000 AMP RATED MAIN SWITCH / INTERRUPTOR ONLY, OTHERWISE 65,000 AIC.

TORQUE WIRE PRESSURE SCREW(S) AS FOLLOWS
APRIETE LOS TORNILLOS DE SUJECION DE CABLE A LOS VALORES DE TORQUE SIGUIENTES:

TYPICAL WIRING DIAGRAM
DIAGRAMA DE ALAMBRADO TIPICO

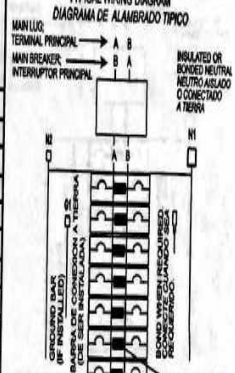

SOLID STAB FOR ALL BRANCH BREAKERS EXCEPT TYPE BDR, BQ, BQC.
CONECTOR SOLIDO PARA TODOS LOS INTERRUPTORES DERIVADOS EXCEPTO LOS TIPO BRD, BQ, BQC.

NOTCHED STAB FOR ALL BRANCH BREAKERS.
CONECTOR RANURADO PARA TODOS LOS INTERRUPTORES DERIVADOS.

INSTALLATION AND USE OF THIS EQUIPMENT SHOULD BE IN ACCORDANCE WITH ALL APPLICABLE LOCAL AND NATIONAL CODES AND REGULATIONS.

DANGER
HAZARDOUS VOLTAGE. WILL CAUSE SEVERE INJURY OR DEATH.
Turn OFF power supplying this equipment before working inside.
TENSION DANGEREUSE. PEUT CAUSER DES BLESSURES GRAVES OU LA MORT.
Couper l'alimentation électrique de cet équipement avant d'y effectuer des travaux.

PELIGRO
VOLTAJE PELIGROSO. CAUSA HERIDAS SEVERAS O MUERTE.
INTERRUMPA el suministro de energía que alimenta este equipo antes de trabajar en el interior del mismo.

TERMINAL RATED FOR 90°C
PER NEC TABLE 310.15(B)(16)

BAKER ELECTRIC
HOME ENERGY
SHOUT OUT.
CASH IN.

Baker Electric Home Energy
2140 Enterprise St
Escondido, CA 92029

Refer a friend, neighbor, coworker or family member to **Baker Electric Home Energy** and we'll reward you with a

$250 Visa® gift card

when they purchase a Solar System, Home Battery, HVAC System, and/or Smart Home Solutions.*

Go to **bakerhomeenergy.com/referral** or call **(877) 578-8080** for more info.

*$250 in Visa® gift card(s) will be mailed within 30 days of the contract's final payment. Contract for Solar System, Home Battery, HVAC System, and/or Smart Home Solutions must total $10,000 or more in value to qualify for Visa gift card. HVAC system includes furnace and/or air conditioner. Some restrictions may apply.